341 JAN-... P.P. 10 DEC...

NP

TM 11-5820-690-15

mt 12-18-69

DEPARTMENT OF THE ARMY TECHNICAL MANUAL

EMFO LIBRARY DO NOT SELL

OPERATOR, ORGANIZATIONAL

DS, GS AND DEPOT

MAINTENANCE MANUAL

RECEIVERS, RADIO R-1421A/URR AND R-1421B/URR

EMFO LIBRARY

HEADQUARTERS, DEPARTMENT OF THE ARMY

SEPTEMBER 1969

163/117

WARNING

Use extreme caution when working with this equipment when power is connected. Contact with exposed terminals or conductors carrying 117 volts ac can result in severe injury or loss of life from electrical shock.

Be careful not to contact high voltage connections (117-volt input terminals) when testing or servicing Receiver, Radio R-1421A/URR and R-1421B/URR.

Change No. 1

HEADQUARTERS
DEPARTMENT OF THE ARMY
Washington, D.C., *12 July 1972*

Operator's, Organizational, Direct Support, General Support, and Depot Maintenance Manual RECEIVERS, RADIO R-1421A/URR AND R-1421B/URR

TM 11-5820-690-15, 25 September 1969, is changed as follows:

1. Remove old pages and insert new pages as indicated below.

Remove pages —	*Insert pages —*
i	i
1-1 through 1-4	1-1 through 1-4
2-3	2-3
8-21	8-21 through 8-27
B-1 through B-3	
C-1 and C-2	C-1 and C-2

2. File this change sheet in front of the publication for reference purposes.

By Order of the Secretary of the Army:

BRUCE PALMER, JR.
General, United States Army
Acting Chief of Staff

Official:

VERNE L. BOWERS
Major General, United States Army
The Adjutant General

Distribution:

To be distributed in accordance with DA Form 12-51, (qty rqr block no. 961) Operator maintenance requirements for R-1421/URR.

TECHNICAL MANUAL
No. 11-5820-690-15

HEADQUARTERS
DEPARTMENT OF THE ARMY
WASHINGTON D.C., *25 September 1969*

Operator, Organizational, DS, GS, and Depot Maintenance Manual

RECEIVERS, RADIO R-1421A/URR and R-1421 B/URR

		Paragraph	Page
CHAPTER 1.	INTRODUCTION		
Section I.	General	1-1—1-3	1-1
II.	Description and data	1-4—1-8	1-2—1-3
CHAPTER 2.	INSTALLATION	2-1—2-4	2-1—2-3
3.	OPERATING INSTRUCTIONS		
Section I.	Operator's controls and indicators	3-1—3-3	3-1—3-3
II.	Operation under usual conditions	3-4—3-9	3-3—3-4
III.	Operation under unusual conditions	3-10, 3-11	3-5
CHAPTER 4.	OPERATOR'S MAINTENANCE		
Section I.	Maintenance requirements	4-1—4-3	4-1
II.	Maintenance procedures	4-4—4-10	4-1—4-3
III.	Operator's troubleshooting and repair	4-11—4-14	4-3
CHAPTER 5.	ORGANIZATIONAL MAINTENANCE		
Section I.	General	5-1, 5-2	5-1
II.	Maintenance procedures	5-3, 5-4	5-1
III.	Organizational troubleshooting and repair	5-5—5-7	5-2—5-3
CHAPTER 6.	CIRCUIT FUNCTIONING		
Section I.	System analysis	6-1, 6-2	6-1
II.	Unit analysis	6-3—6-5	6-2—6-4
CHAPTER 7.	DS, GS, AND DEPOT TROUBLESHOOTING		
Section I.	General	7-1—7-5	7-1—7-4
II.	Subassembly troubleshooting	7-6—7-10	7-7—7-36
III.	Removal and replacement of main assemblies	7-11—7-13	7-40—7-47
IV.	Removal and replacement of subassemblies	7-14—7-25	7-48—7-67
V.	Repair	7-26, 7-27	7-69, 7-70
CHAPTER 8.	GENERAL SUPPORT TESTING PROCEDURES		
Section I.	General	8-1, 8-2	8-1, 8-2
II.	Subassembly test and alignment procedures	8-3—8-16	8-2—8-18
III.	HF receiver final alignment procedure	8-17—8-23	8-19—8-20
IV.	HF receiver final test procedure	8-24, 8-25	
CHAPTER 9.	SHIPMENT AND LIMITED STORAGE AND DEMOLITION TO PREVENT ENEMY USE		
Section I.	Shipment and limited storage	9-1, 9-2	9-1
II.	Demolition of materiel to prevent enemy use.	9-3, 9-4	9-1
APPENDIX A.	REFERENCES		A-1
B.	BASIC ISSUE ITEMS (Deleted)		
C.	MAINTENANCE ALLOCATION		C-1
INDEX			I-1

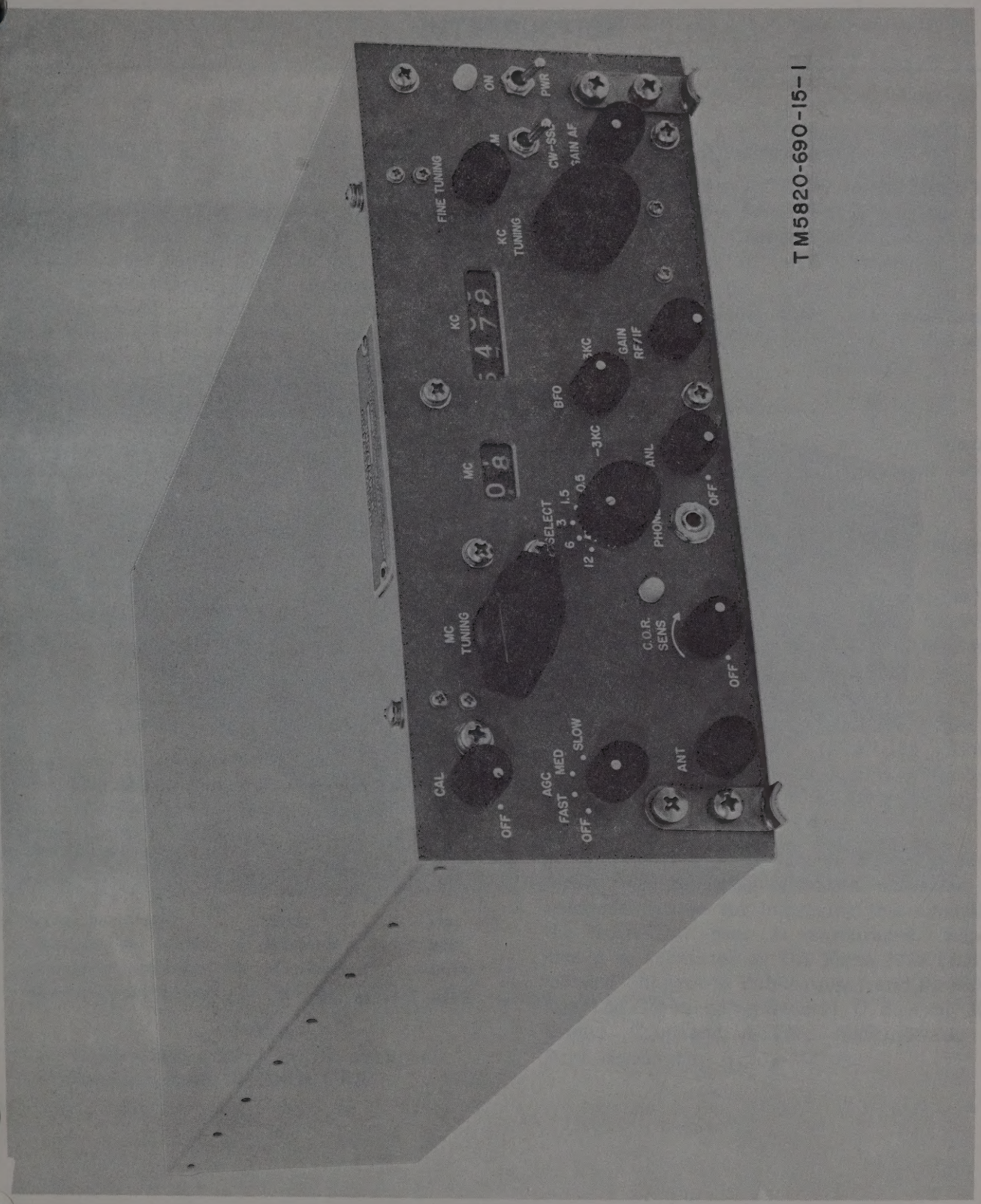

Figure 1-1. *Receiver, Radio R-1421A/URR.*

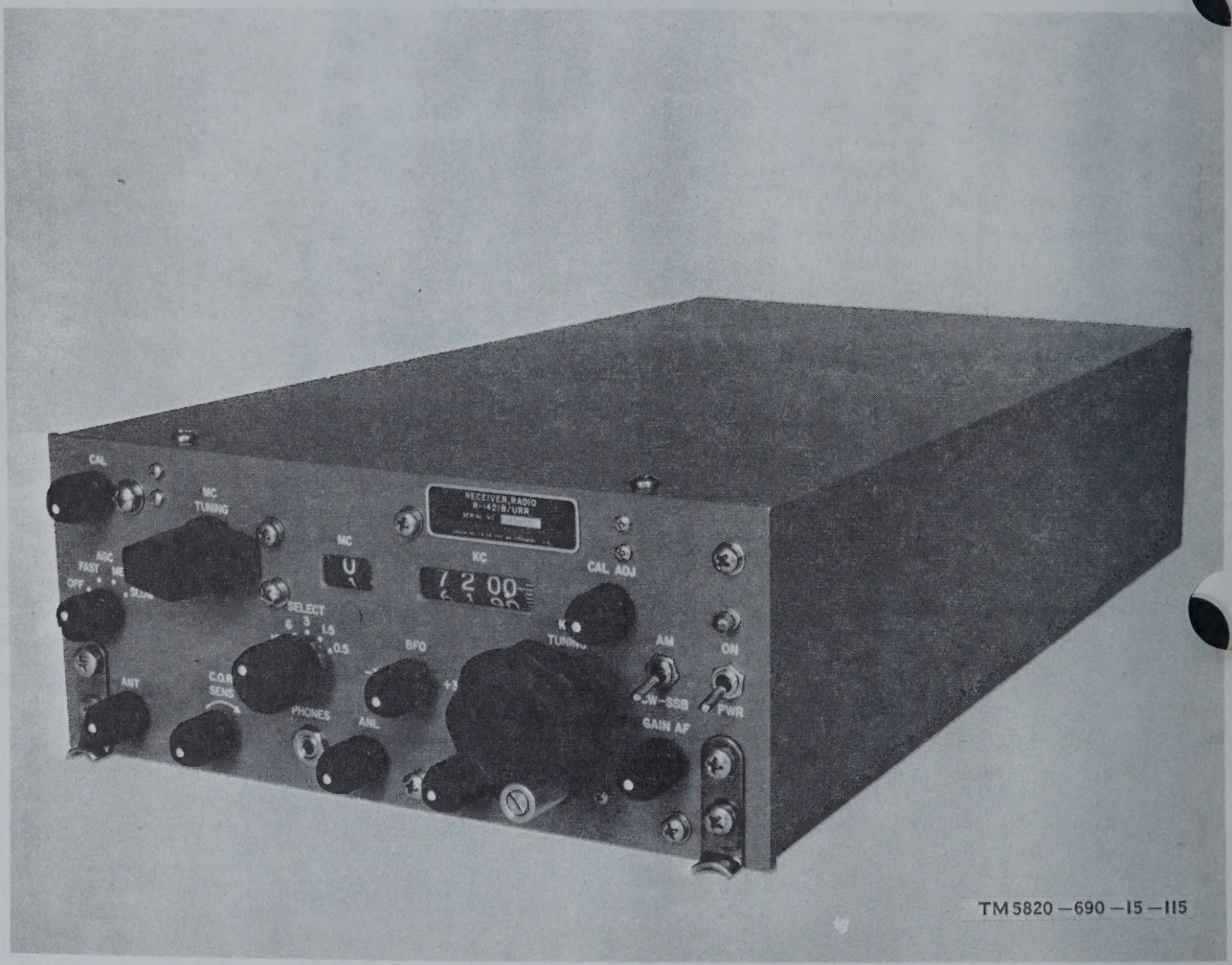

Figure 1-1.1. *Receiver, Radio R-1421B/URR.*

CHAPTER 1

INTRODUCTION

Section I. GENERAL

1-1. Scope

a. This manual describes Receiver, Radio R-1421A/URR (HF receiver) (fig. 1-1) and Receiver Radio R-1421B/URR (Fig. 1-1.1) and provides instructions for the operation and for organizational, direct support, general support, and depot maintenance. Instructions are provided for the operator and the organizational repairman for installation, operation, preventive maintenance, and replacement of parts that are available at organizational maintenance. Circuit functioning is included at the direct support, general support, and depot maintenance categories, together with instructions for troubleshooting, testing, adjustment, alignment, and repair of the equipment and replacement of maintenance parts.

b. A maintenance allocation chart (MAC) appears in appendix C.

NOTE

Appendix C is current as of 26 May 1969.

NOTE

The chart below gives equivalent terminology as used in this manual for frequency measurement.

Former terminology	*Present terminology*	*Abbreviation*
Cycles per second	Hertz	Hz
Kilocycles per second ...	Kilohertz	kHz
Megacycles per second ...	Megahertz	MHz
Gigacycles per second ...	Gigahertz	GHz

NOTE

Illustrations with .1 refer only to Receiver Radio R-1421B URR.

1-2. Indexes of Publications

a. DA Pam 310-4. Refer to the latest issue of DA Pam 310-4 to determine whether there are new editions, Changes, or additional publications pertaining to the equipment.

b. DA Pam 310-7. Refer to DA Pam 310-7 to determine whether there are modification work orders (MWO's) pertaining to the equipment.

1-3. Forms and Records

a. Reports of Maintenance and Unsatisfactory Equipment. Use equipment forms and records in accordance with instructions given in TM 38-750.

b. Report of Packaging and Handling Deficiencies. Fill out and forward DD Form 6 (Report of Packaging and Handling Deficiencies) as prescribed in AR 700-58 (Army), NAVSUP Publication 378 (Navy), AFR 71-4 (Air Force), and MCO P4030.29 (Marine Corps).

c. Discrepancy in Shipment Report (DISREP) (SF361). Fill out and forward Discrepancy in Shipment Report (DISREP) (SF361) as prescribed in AR 55-38 (Army), NAVSUP Pub 459 (Navy), AFM 75-34 (Air Force), and MCO P4610.19 (Marine Corps).

d. Reporting of Equipment Manual Improvements. The reporting of errors, omissions, and recommendations for improving this manual by the individual user is encouraged. Reports should be submitted on DA Form 2028 (Recommended Changes to Publications) and forwarded direct to Commanding General, U. S. Army Electronics Command, ATTN: AMSEL-MA-S, Fort Monmouth, N. J. 07703.

Section II. DESCRIPTION AND DATA

1-4. Purpose and Use

Receiver, Radio R-1421A URR and Receiver, Radio R-1421 B/URR are used in general communications applications for surveillance and signal analysis applications. It is used for reception of amplitude modulated (am.), continuous wave (cw), and single side band signals (ssb) in the high frequency (HF) band. The receiver covers the 1 MHz to 31 MHz frequency range in 30 bands. Each band is 1 MHz wide with continuous tuning throughout the band. A front panel switch selects the desired band; coarse and fine tuning controls allow continuous tuning through this band. The intermediate frequency (IF) bandwidth is variable, and bandwidths of 0.5 through 12 kHz are selected by a front panel switch. A tunable beat frequency oscillator (bfo) operates with the detectors for reception of cw or ssb signals. A front panel switch provides for selection of either manual gain control (mgc) or one of three automatic gain control (agc) time constant positions. The three agc positions provide three different agc decay times. The HF receiver has a carrier-operated relay (c.o.r.) circuit which is carrier level sensitive and allows the HF receiver to operate other electrical equipment. The HF receiver may be used with any unbalanced antenna which tunes to the range of 1 to 31 MHz and has a nominal input impedance of 50 ohms. A front panel headphone jack is provided to monitor the audio output.

1-5. Technical Characteristics

Frequency range	1 to 31 MHz.
Input impedance	50 ohms, nominal.
Input vswr	Less than 2 to 1.
Modes of reception	am., mcw, cw, ssb.
Sensitivity minimum at	
3-kHz bandwidth	Am., 1.2 uv (−105 dbm) with 10 db $\frac{S+N}{N}$ 30% modulation at 1 kHz; cw, ssb, 0.4 uv (−112 dbm) with 10 db $\frac{S+N}{N}$ 30% modulation at 1 kHz.
Tuning	Digital presentation by mechanical counter. Readable to 0.1 kHz.
Calibration accuracy	±1 kHz when referred to the nearest 100-kHz checkpoint.
Calibration	Markers at 100-kHz intervals.
Bandwidth selectivity	12, 6, 3, 1.5, and 0.5 kHz.
Shape factor	1:2.1 or better, 6 to 60 db.
IF output	455 kHz.
Age dynamic range	3-db maximum output change with input range of 1 to 50,000 uv.
Age time constants	3 ms (approx); decay: adjustable.
Bfo	455 kHz ± 3 kHz
Audiofrequency output	250 mw, 600 ohms balanced, rear panel; 20 mw, high impedance, front panel.
Audiofrequency distortion	< 8%.
IF rejection	75 db or better.
Noise limiter	Carrier controlled after preset for limiting level relative to modulated carrier envelope.
Squelch	Adjustable threshold (manual).
Carrier-operated relay	Threshold settable throughout dynamic range (50-ms delay or dropout).
Power input	105/130 volts, 50 to 400 Hz.
Power consumption	25 watts average (including crystal oven).
Weight	15 1/2 pounds.
Size	8 5/8 in. wide by 3 1/2 in. high by 15 in. deep.

1-6. Description

a. The HF receiver is a completely self-contained, rack-mountable unit. It contains five major replaceable assemblies, each of which contains subassemblies such as replaceable modules, component boards, and chassis-mounted components. Removing the case from the HF receiver exposes assemblies and subassemblies mounted to the main chassis. Most of the alignment controls are accessible from the top of the HF receiver with the case removed.

b. The front panel contains all controls, switches, and dial indicators for turn-on of the HF receiver and adjustment for normal operation. The rear panel contains the ac power fuse and fuseholder; connector J3 for 110-volt alternating current (ac) input power and output terminals from the carrier operated relay; connector J4, the audio output for an external 600-ohm speaker; connector J1 for the 455-kc IF output signal; and connector J2, the radiofrequency (RF) input, by a suitable external antenna.

1-7. Differences in Models

Receiver, Radio R-1421B/URR differs from Receiver, Radio R-1421A/URR in the following details:

a. The KC TUNING control is a fast-spin crank type control.

b. The KC counter is a 3 digit instead of a 4 digit counter

c. Nomenclature of the FINE TUNING control, located on front panel, has been changed to CAL ADJ.

d. The preamplifier and band selector assembly has a solid stainless steel shaft and round wafer bushings on rotors.

e. The tie bar is fastened to the preamplifier and band selector assembly with an angle bracket.

f. Vfo is shorter by 1/4-inch and alignment hole is located on the top for easier alignment.

g. The rectifier board is redesigned with smaller components for easier servicing.

h. Main chassis is redesigned to permit easier maintenance of parts.

1-8. Reference Designations

Assemblies and subassemblies of the R-1421/URR have been assigned assembly numbers. The HF receiver is designated as A1, main chassis. Subassemblies within the HF receiver have been assigned numbers as follows. This numbering system will appear throughout the manual.

Reference designation	*Assembly and subassembly*
A1	Main chassis
A1A1	Marker generator
A1A2	Harmonic generator and mixer
A1A2A1	Spectrum generator
A1A2A2	4- to 34-MHz filter
A1A2A3	Harmonic mixer driver
A1A2A4	Harmonic mixer
A1A3	1st IF and 2d mixer
A1A3A1	1st IF amplifier
A1A3A2	1st IF filter
A1A3A3	2d mixer
A1A3A4	2d IF filter and matching network (2 to 3 MHz)
A1A4	3d IF bandwidth selector (455 kHz)
A1A5	3d IF and agc
A1A5A1	3d IF amplifier and automatic noise limiter (anl) (455 kHz)
A1A5A2	Agc detector and amplifier
A1A6	Bfo and detector
A1A7	Audio amplifier
A1A8	Rectifier filter
A1A9	Voltage regulator
A1A10	Reference oscillator
A1A11	37.5-MHz local oscillator amplifier (2d L.O.)
A1A11A1	37.5-MHz amplifier
A1A11A2	37.5-MHz agc
A1A12	Carrier-operated relay amplifier
A1T1	Power transformer
A1K1	Carrier-operated relay (c.o.r.)
A1Q1 and Q2	Power regulator transistors
A2	Front panel
A3	2d IF tuning unit
A3MP1	Gearbox unit
A3A2	Variable frequency oscillator (3d L.O.) unit
A3A2C1	Piston capacitor-frequency variable
A3A1	2d IF amplifier and 3d mixer
A3A1A1	2d IF amplifier (2 to 3 MHz)
A3A1A1C1	Piston capacitor, IF tracking
A3A1A1C2	Piston capacitor, trap tracking
A3A1A2	3d mixer
A4	Preamplifier and band selector assembly
A4A1	Input filter
A4A2	RF amplifier module
A4A3	1st mixer assembly (also stator deck E)
A4A3A1	1st mixer
A4A3A2	1st mixer driver module
A4A4	1st local oscillator module (also stator deck F)
A4A4A1	1st oscillator module
A4A4A2	Buffer module
A4A4A3	Buffer module
A4A5	Stator decks A and B
A4A6	Stator decks C and D
A4A5C1	RF input trimmer capacitor
A4A6C2	RF output tracking capacitor
A4J2	RF input connector
A5	Back panel
A5A1	Ac power line filter
A5A2	Signal indicating receiver (SIR) filter
A5J1	455-kHz IF output
A5J3	Ac power input connector
A5J4	Audio output connector

1-9. Items Comprising Receivers, Radio R-1421A/URR and R-1421B/URR.

The items in the cart below make up an operable Receivers, Radio R-1421A/URR and R-1421B/URR. One copy of TM 11-5820-690-15 is packed with each R-1421A/URR and R-1421B/URR.

		QUANTITY
	Lamp Incandescent	1
6240-933-1442	Lamp, Incandescent	1
5960-057-5288	Electron Tube	2

CHAPTER 2

INSTALLATION

2-1. Unpacking

a. Packaging Data. When packed for shipment, the HF receiver is placed in a carton which is then sealed in a moisture-vaporproof barrier and packed in a wooden shipping container lined with shock-absorbent material. Technical manuals for the receiver are sealed in a moisture-vaporproof barrier bag and placed in the shipping container. The container is then nailed closed and secured with metal bands. A typical shipping box and its contents are shown in figure 2-1. The HF receiver is packed in one shipping container, with dimensions of 13 inches wide, 19 inches deep, and 6 inches high. Its volume is 0.75 cubic feet. The HF receiver, technical manuals, and packing material weigh 26 pounds.

b. Removing Contents.

(1) Cut and fold back the metal bands.

CAUTION

Do not attempt to pry off the top and side; equipment damage may result.

(2) Remove the nails from the top of the box with a nailpuller. Remove the top.

(3) Remove the envelope containing the technical manuals.

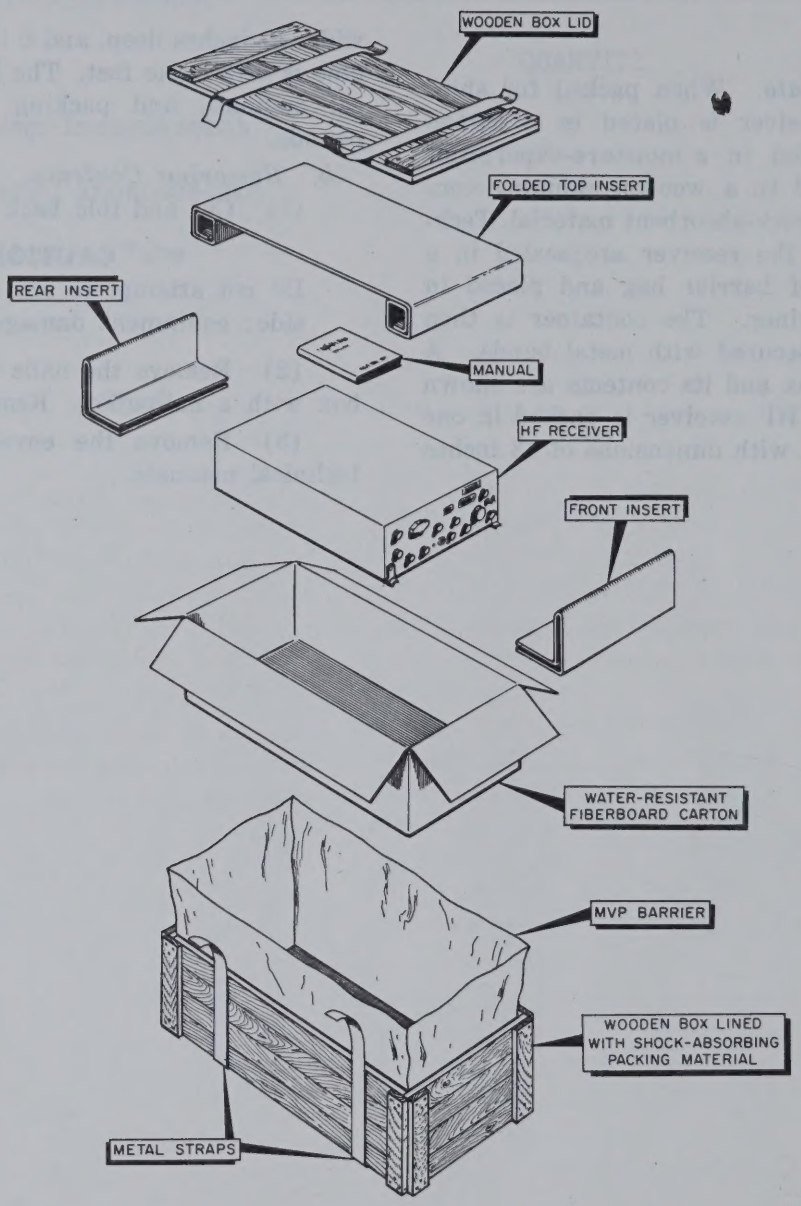

Figure 2-1. Typical packaging diagram.

(4) Remove the carton that is wrapped in a moisture-vaporproof barrier.

(5) Open the moisture-vaporproof barrier, and then open the inner carton.

(6) Carefully remove the HF receiver.

2-2. Checking Unpacked Equipment

a. Inspect the equipment for damage incurred during shipment. If the equipment has been damaged, report the damage on DD Form 6 (para 1-3*b*).

b. See that the equipment is complete as listed on the packing slip.

Report all discrepancies in accordance with TM 38-750. Shortage of a minor assembly or part that does not affect proper functioning of the equipment should not prevent use of the equipment.

c. If the equipment has been used or reconditioned, see if it has been changed by a modification work order. If the equipment has been modified, the MWO number will appear on the front panel near the nomenclature plate. Check to see if the MWO number (if any) and appropriate notations concerning the modification have been entered in the equipment manual.

NOTE

Current MWO's applicable to the equipment are listed in DA Pam 310-7.

2-3. Placement of Equipment

The HF receiver is designed for rack mounting for either fixed or mobile use. The equipment should be placed convenient to required sources of power and signal inputs.

2-4. Installation of Equipment

a. Place the HF receiver in the rack opening prepared for it.

b. Fasten mounting screws through the front panel into the rack members. Tighten the mounting screws.

WARNING

Remove ac power from associated equipment before performing procedure given below.

CAUTION

To avoid transistor, diode, and tube damage, make sure that all power switches on the equipment are set to OFF before making cable connections. *Transistors and diodes may be permanently damaged by improper voltage or polarity.*

c. Attach associated equipment to connectors on the rear panel of the HF receiver.

d. No initial adjustments are required before operation.

CHAPTER 3

OPERATING INSTRUCTIONS

Section I. OPERATOR'S CONTROLS AND INDICATORS

3-1. General

This section covers only the items used by the operator. Items used by maintenance personnel are covered in instructions for the appropriate maintenance category.

3-2. Receiver, Radio R-1421A/URR and Receiver, Radio R-1421B/URR Controls and Indicators

(fig. 3-1 and 3-1.1)

Control or indicator	*Function*
PWR-ON switch	Turns receiver on and off.
PWR-ON indicator lamp	Yellow lamp on front panel lights when power is applied to receiver.
AM/CW-SSB function switch	Selects various modes of operation. In AM position, the HF receiver receives am. signals. In CW-SSB position, the HF receiver receives cw and ssb signals and activates the bfo in the detector module.
GAIN AF control	Variable control, changes level of audio signal.
FINE TUNING control	Provides for kc tuning at reduced rate. Also makes calibration correction to kc indicator (mechanical clutch mechanism).
KC TUNING control	Allows operator to tune continuously throughout 1-mc band selected.
KC indicator	Dial indicates frequency within selected band to which HF receiver is tuned.
MC indicator	Dial indicates band selected.
GAIN RF/IF control	Variable control changes overall gain of HF receiver when in manual gain mode.
BFO control	Variable control, changes frequency of bfo in cw or ssb reception.
ANL control	Sets level at which amplitude of noise impulses begin to be clipped.
PHONES jack	Allows operator to monitor audio signal from front panel with headphones.
SELECT switch	Selects IF bandwidths of 0.5, 1.5, 3.1, 6.0, or 12.0 k.c.
MC TUNING control	Selects bands or channels from 1 through 30 mc in 1-mc increments.
C.O.R. SENS control	Turns carrier-operated relay circuitry on and off and sets signal threshold at which c.o.r. is activated.
COR indicator	Lamp indicates when c.o.r. is switched.
ANT control	Tunes grid or input circuit in rf amp. Peaks incoming signals.
AGC switch	Selects manual gain or one of three AGC positions. Fast, medium and slow decay times are available.
CAL control	Turns on and off 100-kc calibrator and adjusts level of marker signals.

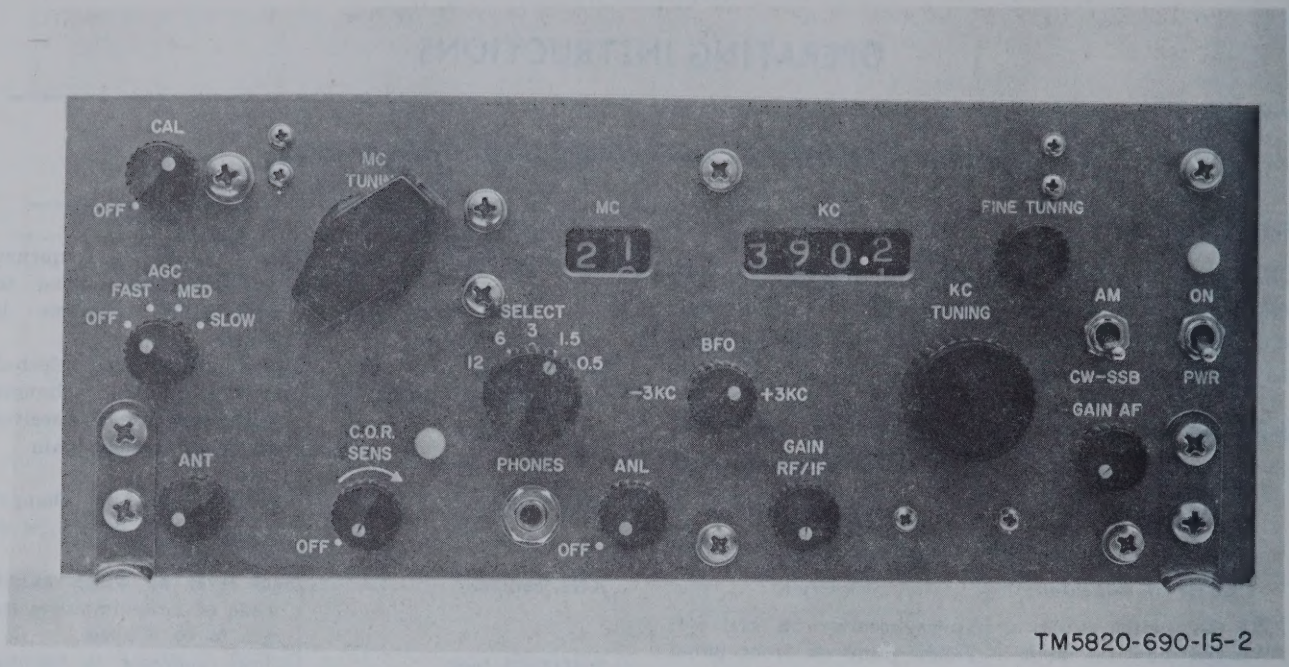

Figure 3-1. Receiver, Radio R-1421A/URR, front panel, controls and indicators.

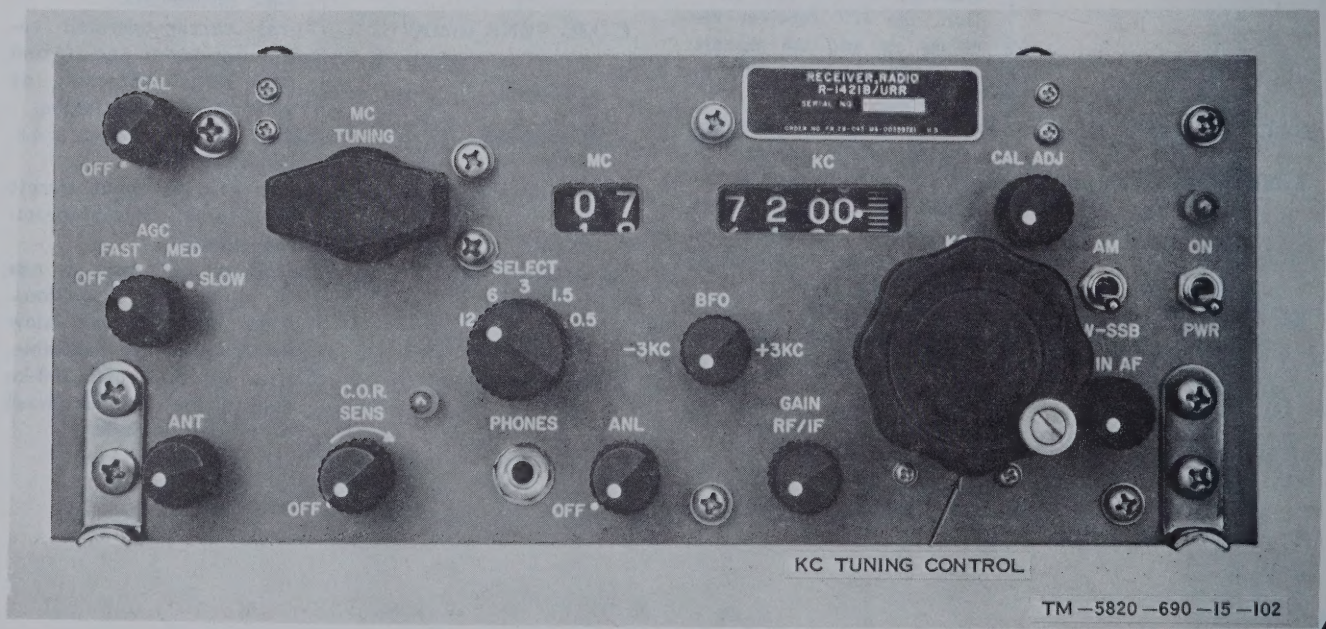

Figure 3-1.1. Receiver, Radio R-1421B/URR, front panel, controls and indicators.

3-3. Receiver, Radio R1421A/URR and 1421 B/URR, Rear Panel Connectors (fig. 3-2)

Connector	*Function*
J1	Provides 455-kc IF output to external device.
J2	Connects HF receiver to cable from external antenna.
J3	Connects 110-vac power input to HF receiver. Also provides external connections for c.o.r.
J4	Connects audio output from HF receiver to speaker with 600-ohm input impedance.

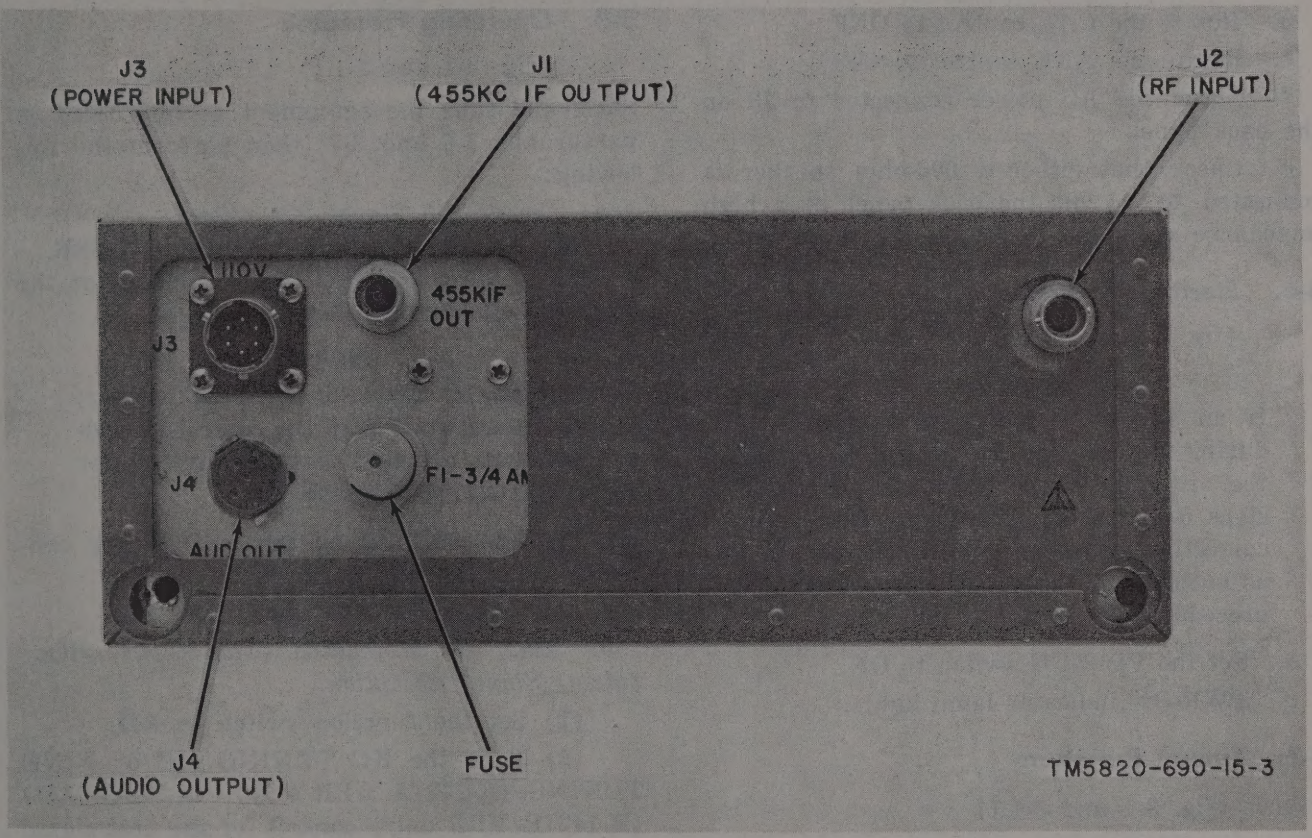

Figure 3-2. Receiver, Radio R-1421A/URR, back panel, connectors.

Section II. OPERATION UNDER USUAL CONDITIONS

3-4. Types of Operation

a. The HF receiver is employed for general communications for surveillance and signal analysis within a frequency range of 1.0 to 31 MHz.

b. For either type of operation, perform the following procedures:

(1) Preliminary starting procedure (para 3-5).
(2) Starting procedure (para 3-6).
(3) Tuning procedure (para 3-7).
(4) Operating procedure (para 3-8).
(5) Stopping procedure (para 3-9).

3-5. Preliminary Starting Procedure

(fig. 3-1)

Perform the operations listed in *a* through *g* below before starting the equipment as described in paragraph 3-6.

a. Set the MC TUNING control to the frequency band to be used.

b. Set the function switch to the desired mode of operation (AM or CW-SSB).

c. Set the AGC switch to FAST.

d. Rotate the CAL control to OFF.

e. Rotate the ANL control to OFF.

f. Check the AC power connected to J3 on the back panel.

g. Check that either a 600-ohm speaker is connected to J4 on the back panel, or a high impedance earphone to J5 on the front panel.

3-6. Starting Procedure

(fig. 3-1 and 3-1.1)

NOTE

If an abnormal indication is obtained during the starting procedure, refer to the equipment performance checks, steps 5 and 6 of chart (para 4-6), for corrective measures. With controls set as outlined in the preliminary starting procedure, perform the following:

a. Set the PWR-ON switch to ON.

b. PWR-ON indicator lamp lights.

3-7. Tuning Procedure

(fig. 3-1 and 3-1.1)

Start the HF receiver as outlined in paragraphs 3-5 and 3-6, and tune it as follows:

a. Check the antenna connected to J2 on the rear panel.

b. Set the SELECT switch to the 6-kc position.

c. Adjust the MC TUNING, KC TUNING, and FINE TUNING (R-1421A/URR only) or CAL ADJ (R-1421B/URR only) controls to the desired frequency.

d. If strong adjacent channel signals interfere with reception, reduce the IF bandwidth by adjusting the SELECT switch.

e. Adjust the KC TUNING, CAL ADJ FINE TUNING, and ANT controls for the best signal reception.

f. Set the GAIN AF control to the desired level.

3-8. Operating Procedure

(fig. 3-1 and 3-1.1)

Start and tune the equipment as instructed in paragraphs 3-6 and 3-7; then perform the following:

a. Cw or Ssb Signal Reception.

(1) Set the function switch to CW-SSB.

(2) Adjust the BFO tuning control for the desired audio pitch for the cw signal.

NOTE

The bfo is capable of a ±3-kHZ swing; therefore, start with the control in mid-position (marking vertical) and set for a 6-kHz IF bandwidth.

(3) For SSB, adjust the BFO tuning control for the desired information.

(4) Adjust the AGC switch for ssb.

b. Am. or Modulated Continuous Wave (Mcw) Signal Reception.

(1) Set the function switch to AM.

(2) Tune the KC TUNING and/or FINE TUNING (R-1421A/URR only) or CAL ADJ (R-1421B/URR only) control for the best signal reception.

(3) Adjust the AGC switch for am.

3-9. Stopping Procedure

(fig. 3-1)

Set the PWR-ON switch to the off position.

Section III. OPERATING UNDER UNUSUAL CONDITIONS

3-10. Operation Under Tropical Conditions

In tropical climates, the HF receiver may be operated in swamp areas where extremely moist conditions exist. The high relative humidity causes condensation of moisture whenever its temperature becomes lower than that of the air. Try to keep the equipment dry.

3-11. Operation in Desert Climates

In desert climates, large amounts of sand and dust may enter the moving parts of the equipment. Cover the equipment when it is not in use to minimize collection of sand. Pay particular attention to areas where parts are lubricated. Some areas will require cleaning (para 4-8) at different intervals when operating under these conditions.

CHAPTER 4

OPERATOR'S MAINTENANCE

Section I. MAINTENANCE REQUIREMENTS

4-1. Scope of Operator's Maintenance

Operator's maintenance of HF Receiver, is limited to the categories listed below. The tools required are given in paragraph 4-3.

a. Operator's daily preventive maintenance checks and services (para 4-6).

b. Operator's weekly preventive maintenance checks and services (para 4-7).

c. Cleaning (para 4-8).

d. Touchup painting (para 4-9).

e. Troubleshooting (para 4-13).

f. Repairs and adjustments (para 4-14).

4-2. Typical Operator Maintenance Duties

a. Visual inspection.

b. Replacing indicator lamp.

c. Tightening external connections and mountings.

d. Replacing fuses.

e. Cleaning.

f. Preventive maintenance.

4-3. Tools and Equipment Required for Operator's Maintenance

No special tools or equipments are required for operator's maintenance of the HF receiver. Common tools and materials required are listed below.

a. Tools. The only tool required is a screwdriver.

b. Materials.

(1) Cleaning Compound, FSN 7930-395-9542.

(2) Drycleaning brush (soft).

(3) Clean, lint-free cloth.

Section II. MAINTENANCE PROCEDURES

4-4. Preventive Maintenance

Preventive maintenance is the systematic care, servicing, and inspection of equipment to prevent the occurrence of trouble, to reduce downtime and to assure that the equipment is serviceable.

a. Systematic Care. The procedures given in paragraphs 4-5 through 4-10 cover routine systematic care and cleaning essential to proper upkeep and operation of the equipment.

b. Preventive Maintenance Checks and Services. The preventive maintenance checks and services charts (para 4-6 and 4-7) specify functions to be performed at specific intervals. These checks and services are to maintain Army electronic equipment in a combat serviceable condition; that is, in good general (physical) condition and in good operating condition. To assist operators in maintaining combat serviceability, the charts indicate what to check, how to check, and what the normal conditions are. If a defect is found and cannot be remedied by the corrective action indicated, higher category maintenance or repair is required. Records and reports of these checks and services must be made in accordance with the requirements set forth in TM 38-750.

4-5. Operator's Preventive Maintenance Checks and Services Periods

Preventive maintenance checks and services by the operator as specified in paragraphs 4-6 and 4-7, respectively, will be performed daily and weekly. The daily check may be performed once each week instead of the weekly check if the receiver is maintained in standby condition.

4-6. Operator's Daily Preventive Maintenance Checks and Services Chart

Removal of the HF receiver from its rack is not required. References given in the chart below are to corresponding item numbers in the troubleshooting chart in paragraph 4-13; applicable repair and adjustment instructions in paragraph 4-14.

Step No.	Item to be inspected	Procedure	Reference
1	Completeness	See that HF receiver is complete	App A
2	Frequency dial glass	Check for—	
		a. Cracks	*a.* Para 4-14.
		b. Looseness	*b.* Para 4-14.
		c. Dirt	*c.* Para 4-8.
3	Frequency indicators	Check for change of indication with rotation of tuning controls.	
4	Controls and switches	Check to see that mechanical action of each knob, control, and switch is smooth and free of external or internal binding and that no excessive looseness is apparent.	
5	PWR-ON switch	With input power available to HF receiver, set to ON. Note that PWR-ON indicator lamp lights.	Para 4-13.
6	Operation	Perform all preliminary starting procedures (para 3-5). Set AM/CW-SSB switch to CW-SSB. Rotate CAL control fully clockwise. Set SELECT switch to 6 (6 kc). Rotate GAIN AF control clockwise. Turn KC TUNING control to put counter to nearest 100-kc frequency. An audio tone should be heard.	Para 4-13.

4-7. Operator's Weekly Preventive Maintenance Checks and Services Chart

The daily preventive maintenance checks and services procedure must always precede performance of the weekly procedure. References given in the chart below are to corresponding item numbers in the troubleshooting chart in paragraph 4-13; applicable repairs and adjustment instructions in paragraph 4-14.

Step No.	Item to be inspected	Procedure	Reference
1	Hardware	Check receiver for loose mountings, loose or missing hardware, and loose knobs. Replace or tighten as necessary.	
2	Cables	Inspect cables for chafed, cracked or frayed insulation. Replace connectors that are broken, arced, stripped, or excessively worn.	
3	Latches	Inspect latches for excessive wear or looseness. Replace or tighten as required.	
4	Metal surfaces	Inspect exposed metal surfaces for rust and corrosion. Clean and touch up paint as required.	Para 4-8, 4-9.
5	GAIN and BFO controls	Repeat step 6, para 4-6.	
		a. Vary AF GAIN control; corresponding change in volume should be heard.	
		b. Set AGC switch to OFF: vary RF/IF GAIN control; corresponding change in volume should be heard.	

4-8. Cleaning

Inspect the exterior surfaces of the HF receiver. The exterior surfaces should be free of dirt, grease, and fungus.

a. Remove dust and other loose dirt with a soft brush or a clean, soft cloth.

WARNING

Prolonged breathing of cleaning compound fumes is dangerous; make certain that adequate ventilation is provided. Cleaning compound is flammable; do not use near a flame. Avoid contact with the skin; wash off any that spills on your hands.

b. Remove grease, fungus, and ground-in dirt from the cases; use a cloth dampened (not wet) with Cleaning Compound (FSN 7930-395-9542).

c. Remove dirt from plugs and jacks with a soft brush.

CAUTION

Do not press on the dial glass when cleaning; the glass may be damaged.

d. Clean the front panel dial glass and control knobs; use a soft, clean cloth. If dirt is difficult to remove, dampen the cloth with water; use mild soap if necessary.

4-9. Touchup Painting Instructions

Remove rust and corrosion from metal surfaces by lightly sanding them with fine sandpaper. Brush two thin coats of paint on the bare metal to protect it from further corrosion. Refer to the applicable cleaning and refinishing practices specified in TB 746-10.

4-10. Lubrication

The mechanical assemblies used in the HF receiver require no lubrication of any type or were permanently lubricated at time of manufacture. No further lubrication is required.

Section III. OPERATOR'S TROUBLESHOOTING AND REPAIR

4-11. General Troubleshooting Information

Troubleshooting this equipment is based upon the operational check contained in the daily preventive maintenance checks and services chart. To troubleshoot the equipment, perform the operational procedures in paragraphs 3-4 through 3-9; then perform the functions in the daily preventive maintenance checks and services chart (para 4-6) and proceed through the items until an abnormal condition or result is observed. When an abnormal condition or result is observed, perform the checks and corrective actions indicated in the troubleshooting chart. If the corrective measures indicated do not result in correction of the trouble, refer to a higher category of maintenance.

4-12. Troubleshooting Correction Failure

Troubles that are beyond the scope of operator's maintenance require that the equipment be repaired at organizational maintenance.

4-13. Operator's Troubleshooting Chart

Item No.	*Trouble symptom*	*Probable trouble*	*Checks and corrective measures*
1	PWR-ON indicator does not light.	*a.* Open fuse	*a.* Check fuse F1, and replace if open.
		b. Defective lamp	*b.* Replace lamp DSI.
2	No output from HF receiver.	*a.* GAIN RF/IF control not properly set with AGC switch OFF.	*a.* Turn GAIN RF/IF clockwise until audible signal is obtained or turn AGC switch to ON.
		b. GAIN AF control not properly set.	*b.* Turn GAIN AF control clockwise until audible signal is obtained.

4-14. Repairs and Adjustments

No adjustments are to be made by the operator on the HF receiver. Repairs are limited to replacement of fuses, dial lamps, and missing hardware.

a. Replacement of Fuse F1.

(1) On the rear panel of the HF receiver, unscrew the cap of the fuseholder in the direction indicated by the arrow.

(2) Withdraw the cap, and remove the fuse.

(3) Insert a new fuse (3/4 AMP—3 AG), and screw the cap on.

b. Replacement of PWR-ON Indicator Lamp.

(1) Remove the white opaque indicator counterclockwise by rocking from side to side while pulling it forward.

(2) Remove the defective lamp, and insert a new lamp.

(3) Install the indicator lens by inserting it in the barrel of the lampholder and pressing it inward until the lens snaps in place.

c. Replacement of C.O.R. SENS Indicator Lamp. Follow the instructions in *b*(1) through (3) above.

CHAPTER 5

ORGANIZATIONAL MAINTENANCE

Section I. GENERAL

5-1. Scope of Organizational Maintenance

Organizational maintenance of the HF receiver, is limited to the procedures listed below:

a. Quarterly preventive maintenance (para 5-4).

b. Troubleshooting (para. 5-6).

c. Sectionalization of trouble to a particular area.

5-2. Tools, Test Equipment, and Materials Required

a. Tools and Test Equipment. A list of parts authorized for organizational maintenance appear in TM 11-5820-690-25P. No special test equipment is needed. Tools are included in the following:

(1) Tool Kit, Electronic Equipment TK-100 G.

(2) Tool Kit, Operations Central TK-101/G.

(3) Multimeter TS-352B/U (multimeter).

b. Materials.

(1) Cleaning compound, FSN 7930-395-9542.

(2) Dry cleaning brush (soft).

(3) Clean, lint-free cloth.

Section II. MAINTENANCE PROCEDURES

5-3. Preventive Maintenance

a. Systematic Care. Organizational preventive maintenance is performed on a quarterly basis or whenever the receiver is returned for servicing. The servicing sequence supplements the operator's maintenance procedures and starts with the preventive maintenance procedures detailed in the quarterly preventive maintenance checks and services chart (para 5-4).

b. Preventive Maintenance Checks and Services. The quarterly preventive maintenance checks and services chart (para 5-4) specifies functions to be performed at specific intervals.

5-4. Organizational Quarterly Preventive Maintenance Checks and Services Chart

(fig. 5-1)

CAUTION

Before removing the equipment from the operating location, disconnect all power sources. Remove the HF receiver from its normal operating location (rack mounting), and place it on the service bench. Remove the dust cover.

Step No.	*Item to be inspected*	*Procedure*
1	Completeness	Check to see that HF receiver is complete.
2	Visual inspection.	Check for the following: *a.* Connectors with bent pins, distorted barrels, broken or missing pins or barrels, corrosion or fungus growth, cracked or discolored inserts. *b.* Frayed wiring or cabling, broken conductors, broken or corroded ground connections, improper wire dress. *c.* Loose hardware, damaged terminal boards, missing hardware, damaged or broken parts. *d.* General condition of interior components, subassemblies and assemblies for loose, missing, or damaged parts. **WARNING** Prolonged breathing of cleaning compound fumes is dangerous; make certain that adequate ventilation is provided. Cleaning compound is flammable; do not use near a flame. Avoid contact with the skin; wash off any that spills on your hands.

Step No.	Item to be inspected	Procedure
3	Cleaning	a. Use dry brush to remove dust and other loose dirt. Moisten brush, if necessary, with cleaning compound and then wipe parts dry. (Do not clean electrical contacts in this manner.) **WARNING** Compressed air is dangerous and can cause serious bodily harm. It can also cause mechanical damage to the equipment. Do not use compressed air to dry parts where cleaning compound has been used. b. Use dry, compressed air at a pressure not exceeding 60 psi to remove dust from inaccessible places, taking care to avoid mechanical damage.
4	Power supply	**WARNING** Voltage dangerous to personnel are present in HF receiver when connected to 110-vac power source. Be careful when performing checkout or maintenance functions. c. Connect HF receiver to 110-vac power source. Set PWR-ON switch to ON. Connect multimeter at test point A1A9E1; meter should indicate +22.5 (±0.5) vdc. b. Connect multimeter at test point A1A9E10; meter should indicate −20 (±0.5) vdc. c. Connect multimeter at point A1A8E1; meter should indicate +110 (±11) vdc.

Section III. ORGANIZATIONAL TROUBLESHOOTING AND REPAIR

5-5. General Troubleshooting Information

Troubleshooting this equipment is based on the operational check contained in the quarterly preventive maintenance checks and services chart. To troubleshoot the equipment, perform the quarterly preventive maintenance checks and services (para 5-4). When an abnormal condition or result is observed, perform the checks and corrective actions indicated in the troubleshooting chart (para 5-6). If the corrective measures indicated do not result in correction of the trouble, higher maintenance is required.

5-6. Organizational Troubleshooting Chart

Item No.	Trouble symptom	Probable trouble	Checks and corrective measures
1	No power supply voltage.	a. Defective connector A5J3	a. Check continuity.
		b. Open fuse A5F1	b. Replace fuse.
		c. Open power transformer primary.	c. Refer to higher category of maintenance.
	Low voltage power supply voltage.	d. Poor or high resistance connection.	d. Check continuity and resistances in power supply and voltage regulator circuits.
		e. Components shorted together or to ground.	e. Perform visual inspection of circuits, and check for short circuits with multimeter.
	High voltage power supply.	f. Defective voltage regulator.	f. Check for open bleeder resistor connection or shorted leads on current limiting resistors or open zener diodes.
2	Low sensitivity	a. Defective agc or improper adjustment.	a. Switch AGC on and off. If no difference in output is noticed, refer to higher maintenance.
		b. RF amplifier defective or out of alignment.	b. Refer to higher category of maintenance.
		c. 1st IF amplifier exhibits low gain or misalignment.	c. Same as b above.

Item No.	*Trouble symptom*	*Probable trouble*	*Checks and corrective measures*
3	Dynamic range is not linear.	*a.* Low conversion gain from L.O. misalignment.	*a.* Refer to higher category of maintenance.
		b. RF amp misalignment	*b.* Adjust A4 CI-ANT. Same as *a* above.
		c. 1st local oscillator misalignment.	*c.* Same as *a* above.

5-7. Repairs and Adjustments

Detailed repair and adjustment procedures are given in chapters 7 and 8, where applicable. They are omitted for organizational maintenance since all troubles requiring repair and major adjustment are handled at the higher category of maintenance or described in the preventive maintenance charts.

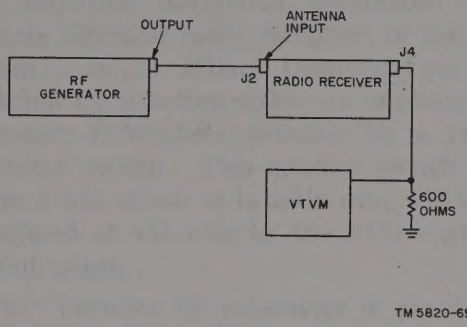

Figure 5-1. *Equipment configuration for quarterly preventive maintenance operational checks.*

CHAPTER 6

CIRCUIT FUNCTIONING

Section I. SYSTEM ANALYSIS

6-1. Systems Application

The HF receiver is used for general communications application or for surveillance and signal analysis application.

a. General Communications. The HF receiver may be operated from any type of antenna, although an antenna presenting a 50-ohm load impedance to the HF receiver will result in the best performance. Use an antenna designed for the specific frequency of operation. For general communications use, only an antenna and headphones or loudspeaker are required. The HF receiver is designed for demodulation of am., cw, and ssb signals.

b. Surveillance and Signal Analysis. For surveillance and signal analysis applications, the HF receiver can be used in conjunction with Indicator, Panoramic IP-835/MLQ-29 (panoramic indicator). The panoramic indicator is designed to complement the HF receiver to give signal display over a 200-, 100-, or 20-kHz spectrum bandwidth, allowing the operator to view signals within the frequency range of the selected bandwidth centered on the nominal receiver frequency and observe their relative amplitudes, operational cycles, and modulation characteristics. Approximately 40 decibels (db) of dynamic range display is obtained with this unit. The frequency displayed on the panoramic indicator is the 455-kHz IF before selective filtering. Three useful signal outputs are available. The 455-kHz IF signal is brought out at J1 for input to the panoramic indicator. High level (250-milliwatt (mw)) audio is brought out of the HF receiver through J4-A and B with a 600-ohm termination impedance. A pair of 600-ohm headphones or a speaker with a 600-ohm input transformer is connected at this point. High impedance headphones may be connected to J5 on the front panel.

6-2. Purpose and Use

a. The HF receiver is used for the reception of amplitude modulated, continuous wave, and single sideband radio reception in the HF range from 1 to 31 MHz. Demodulation is accomplished by selecting either an envelope (AM) or product (CW-SSB) detector by a front panel selector switch. This selector switch also operates a bfo which is tunable over a 6-kHz range, centered at 455 kHz by the BFO control on the front panel.

b. Variable IF selectivity is provided in the front panel SELECT switch which can select mechanical filters of 500 Hz, 1.5 kHz, 3.0 kHz, 6.0 kHz, and 12 kHz in 6-db bandwidths. Agc is also selectable: FAST, MED (medium), SLOW, or manual gain control (AGC-OFF).

c. Tuning is accomplished by three controls: MC (megahertz) TUNING, KC (kilohertz) TUNING (coarse), and FINE TUNING. The entire tuning range is divided into 1-MHz bands, beginning and ending on incremental megahertz. The desired 1-MHz band is selected by the MC TUNING switch and is indicated by the mechanical counter through the window on the front panel. The KC TUNING control provides continuous tuning across the selected 1-MHz band and is indicated by the mechanical counter on the right-hand side of the front panel.

d. A calibration signal is provided at increments of 100 kHz throughout the tuning range.

e. The HF receiver is designed to operate most efficiently with an antenna of 50 ohms impedance but will give satisfactory results with any antenna; antennas of greater length produce better results. To accommodate varying reactances between different antennas, the antenna trimmer allows the operator to compensate for detuning of the input circuit.

Section II. UNIT ANALYSIS

6-3. Block Diagram

Figure 6-1 is a functional block diagram of the HF receiver. This block diagram shows the HF receiver divided into its various functions. Figure 6-22 shows a block diagram of the subassemblies and their relationship to the functions of the overall HF receiver.

6-4. Overall HF Receiver Description

a. The HF receiver is a triple-conversion superheterodyne employing two oscillators as tuning elements (fig. 6-1). The low-pass input filter filters out signals above 32 MHz. The 1- to 31-MHz frequency range is divided into incremental 1-MHz. The RF amplifier has a 30-position switch with tuned sections for each band. The 1st L.O. is a free-running oscillator which has 30 switchable frequencies. The appropriate frequencies are mixed in the 1st mixer for the first conversion to yield the 1st IF, 39.5 to 40.5 MHz. The second conversion in the 2nd mixer converts this 1-MHz signal, centered around 40 MHz, down to 2 MHz to 3 MHz, 2d IF. This translation is accomplished with a 1-MHz oscillator and a harmonic generator. The 1-MHz reference oscillator is an oven-controlled crystal oscillator yielding a frequency stability of 5×10^{-7} parts. Harmonics of this oscillator, having the same stability and accuracy, are generated in the spectrum generator and filtered between 4 and 34 MHz in the spectrum shaping filter. The band-limited spectrum is mixed in the harmonic mixer with the 1st local oscillator which is selectable with the MC TUNING control and operates at and between 41.5 and 70.5 MHz at 1-MHz increments. The output of spectrum mixer is fed to the 37.5-MHz filter amplifier, which is a narrowband high-gain device. Since the 1st local oscillator is a free-running oscillator, the frequency deviations from nominal are transferred to the 37.5-MHz signal in the filter amplifier. The 37.5-MHz signal is raised to a sufficient level to drive the 2d mixer as a local oscillator (approximately 0 decibels) (referred to 1 milliwatt in 600 ohms (dbm)). The 2d mixer combines this 37.5-MHz synthesized local oscillator with the 39.5 to 40.5-MHz IF bandpass. The output of the 2nd mixer is passed through a broadband 2- to 3-MHz filter.

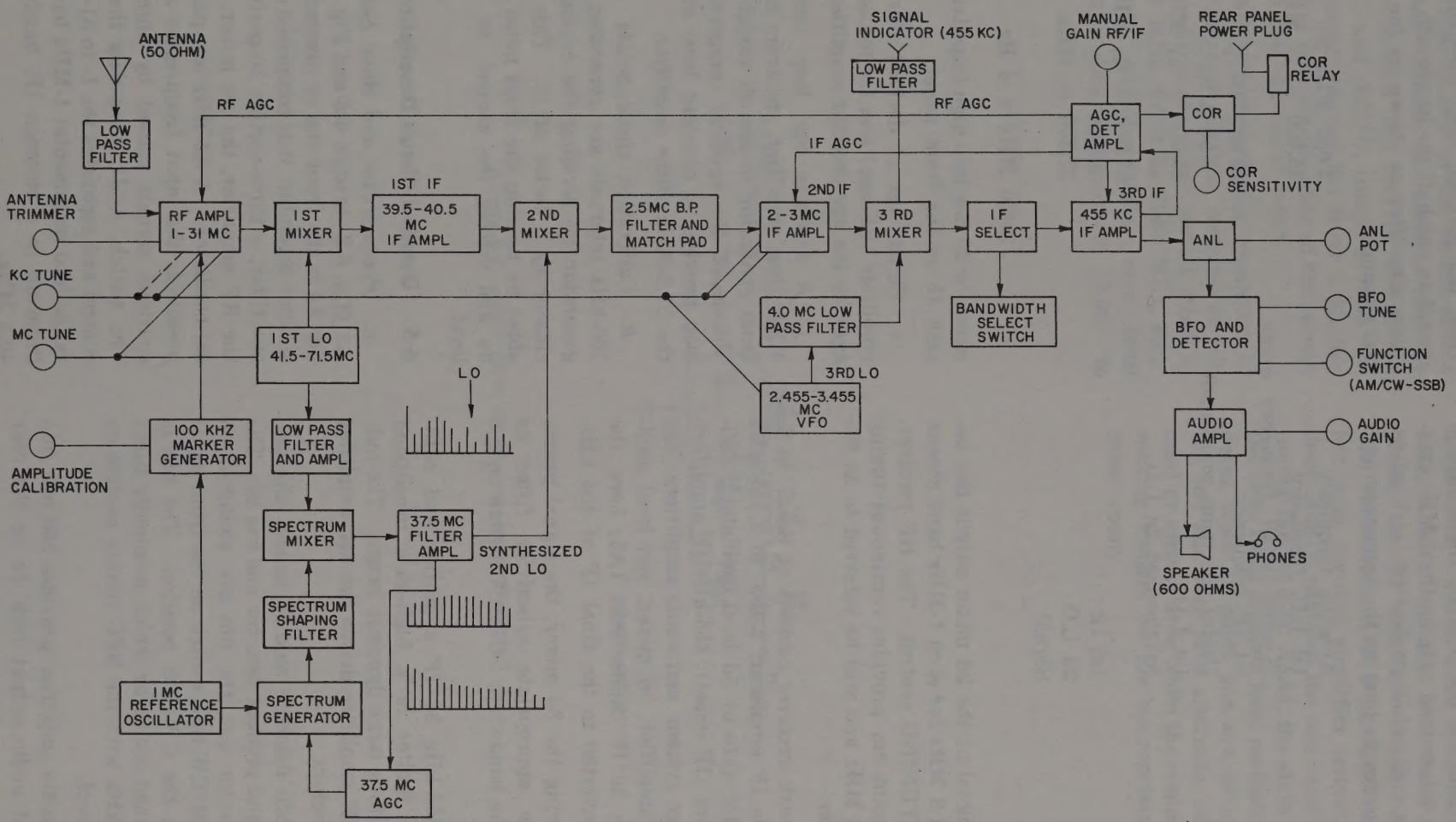

Figure 6-1. Receiver, Radio R-1421A/URR, block diagram.

b. The frequency integrity of the signal at this point is determined only by the 1-MHz crystal oscillator and is independent of 1st local oscillator frequency as long as the frequency drift from the nominal local oscillator frequency is less than one-half the bandwidth of the 37.5-MHz filter amplifier as shown by the following typical example:

	Antenna frequency 5.600 MHz ±0
	1st L.O. frequency 45.500 + △ MHz
1st IF signal	△=any small frequency error 1st IF frequency 39.900 + △
Synthesized 2d L.O. signal	Useful spectrum component 8.00 MHz ± 4 Hz 1st L.O. 45.500 + △ MHz Synthesized 2d L.O. 37.500 + △ MHz + 4 Hz
Signal at output 2d mixer	1st IF 39.900 + △ MHz 2d L.O. 37.500 + MHz Signal 2.400 MHz ± 4 Hz

c. The signal at the 2d mixer output lies between 2 and 3 MHz for each 1-MHz band chosen by the MC TUNING control. The HF receiver, from this point on, provides continuous tuning from 2 to 3 MHz and will be referred to as the basic receiver.

d. The basic receiver consists of the 2- to 3-MHz tunable IF amplifier, 2.455- to 3.455-MHz local oscillator (vfo or 3d local oscillator), 455-kHz IF filters (IF select), 455-kHz IF amplifier, detectors, agc system, and audio amplifiers. The tunable IF amplifier, 3d mixer, and local oscillator are on 2d IF tuning unit 1A3; here, the signal is converted to the final IF of 455 kHz.

e. Following the 3d mixer, the signal passes through the appropriate selectivity filter as chosen by the bandwidth SELECT switch on the front panel.

f. The 455-kHz 3d IF amplifier and automatic noise limiter is a high-gain broadband amplifier with a large dynamic range. The output of the IF amplifier drives the agc amplifier and the detectors.

g. The bfo detector module houses the am. (envelope) and product detector and the bfo. The product detector and the bfo are switched on when the AM/CW-SSB switch on the front panel is placed in the CW-SSB position. The bfo is a voltage tuned oscillator which nominally tunes 452 to 458 kHz with the BFO tuning control on the front panel.

h. The audio amplifier provides 250 mw into 600 ohms at audio output jack J4 on the rear panel, or 20 mw into high impedance at PHONES jack J5 on the front panel.

i. Signal agc is derived for both the RF amplifier (RF agc) and for the 2d and 3d IF (IF agc) by the agc detector amplifier.

j. A separate agc loop incloses the 37.5-MHz filter amplifier, spectrum mixer, and spectrum generator to absorb variations in the amplitude of the spectral components. This agc loop provides a constant level at the output of the 37.5-MHz filter amplifier.

k. Calibration check points at incremental 100-kHz intervals are generated in the marker generator by dividing the crystal reference oscillator by a factor of 10. This function is enabled by turning the front panel CAL control to on and setting the control to an appropriate level.

6-5. Detailed Circuit Descriptions

a. Preamplifier and Band Selector Assembly A4 (fig. 6-2 through 6-8 and Fig. 6-23). Assembly A4 is the front end or preamplifier and band selector assembly. It is comprised of a low-pass input filter, a three-section 30-position RF switch, the RF amplifier, the 1st mixer, and the 1st local oscillator. A 32-MHz low-pass filter, A4A1, preselects the input frequencies and reduces the spurious signals caused by higher frequencies. The switch, A4S1, comprises the MC TUNING control and separates the 1- to 31-MHz frequency range into incremental 1-MHz bands, translating these up to a common IF. bandpass of 39.5 to 40.5 MHz.

(1) The first section of the switch selects the tuned circuit between the antenna and the amplifier input, A4S1A and A4S1B. The second section, A4S1C and A4S1D, counting from the back of the receiver toward the front is similar to the first and is between the plate of the second amplifier stage and the mixer input.

(2) Counting from antenna connector J2 forward, the first deck, A4S1A, contains all odd band number coils in the input circuit (that is, 1.000 to 1.999 MHz, 3.000 to 3.999 MHz, etc); the second deck, A4S1B, contains even band number coils for the input circuit (2.000 to 2.999 MHz, 4.000 to 4.999 MHz, etc). The third deck, A4S1C, contains odd band number coils tuning the RF amplifier A4A2 output circuit; the fourth deck, A4S1D has the even band number coils for the amplifier output. The fifth deck, A4S1E contains the odd band number coils tuning the 1st L.O. A4A4, the sixth deck A4S1F, the even band number local oscillator coils. The decks work in pairs and are so arranged that the odd and even coils alternate, one being on a dead or unused area while the contact wipers are making contact on the appropriate coil on the other rotor.

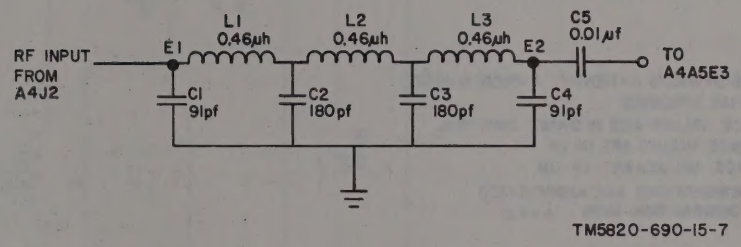

Figure 6-2. Input filter A4A1, schematic diagram.

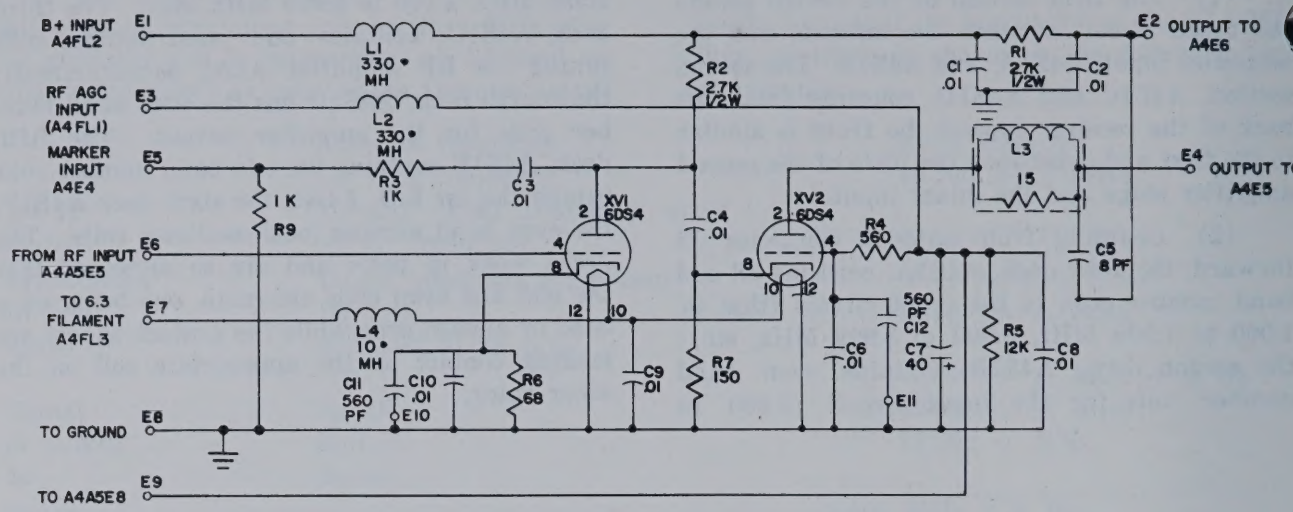

NOTES

1. K = 1000 F = FARAD U = MICRO H = HENRY P = PICO W = WATT
2. UNLESS OTHERWISE SPECIFIED:
   ALL RESISTANCE VALUES ARE IN OHMS 1/4W ±5%
   ALL CAPACITANCE VALUES ARE IN UF
3. ALL INDUCTANCE VALUES ARE IN UH
4. REFERENCE DESIGNATIONS ARE ABBREVIATED
   PREFIX THE DESIGNATION WITH A4A2

TM5820-690-15-8

Figure 6-3. RF amplifier module A4A2, schematic diagram.

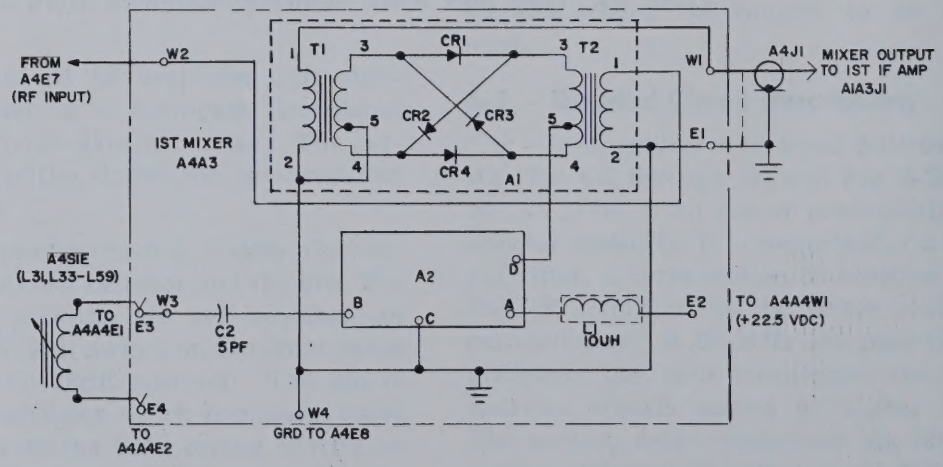

NOTES:

1. U = MICRO F = FARAD P = PICO
2. UNLESS OTHERWISE INDICATED:
   ALL CAPACITANCE VALUES ARE IN UF
3. ALL DIODES ARE IN905
4. REFERENCE DESIGNATIONS ARE ABBREVIATED
   PREFIX THE DESIGNATION WITH A4A3

TM5820-690-15-9

Figure 6-4. 1st mixer assembly A4A3, schematic diagram.

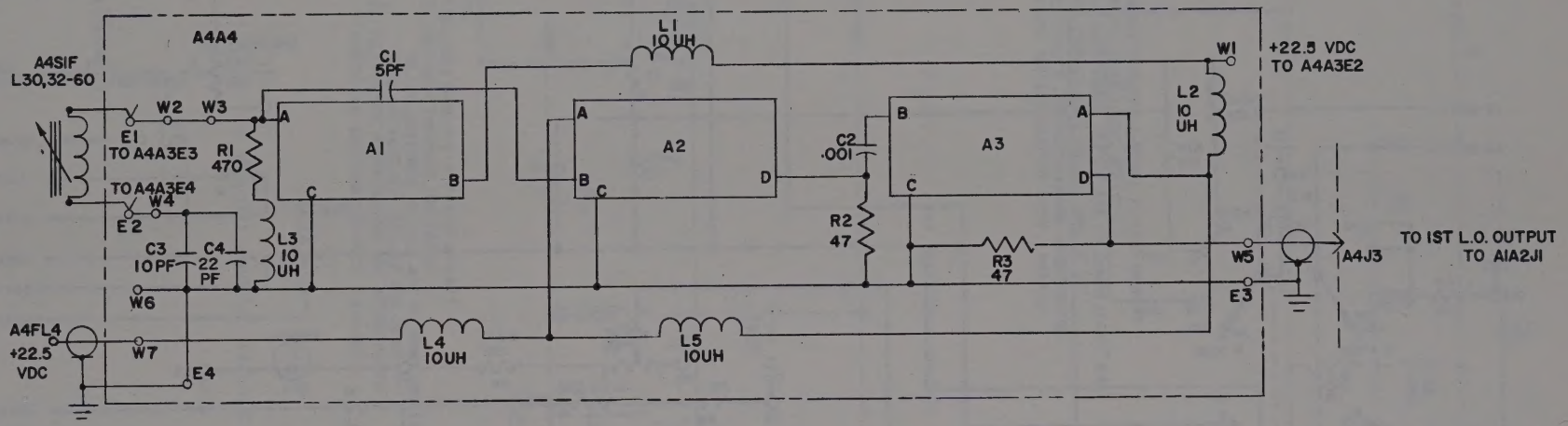

TM5820-690-15-10

NOTES:

1. U=MICRO F=FARAD H=HENRY P=PICO W=WATT
2. UNLESS OTHERWISE INDICATED:
3. ALL RESISTANCE VALUES ARE IN OHMS 1/4W ±5%
4. ALL CAPACITANCE VALUES ARE IN UF
5. REFERENCE DESIGNATIONS ARE ABBREVIATED PREFIX THE DESIGNATION WITH A4A4

Figure 6-5. 1st local oscillator A4A4, and stator deck F, schematic diagram.

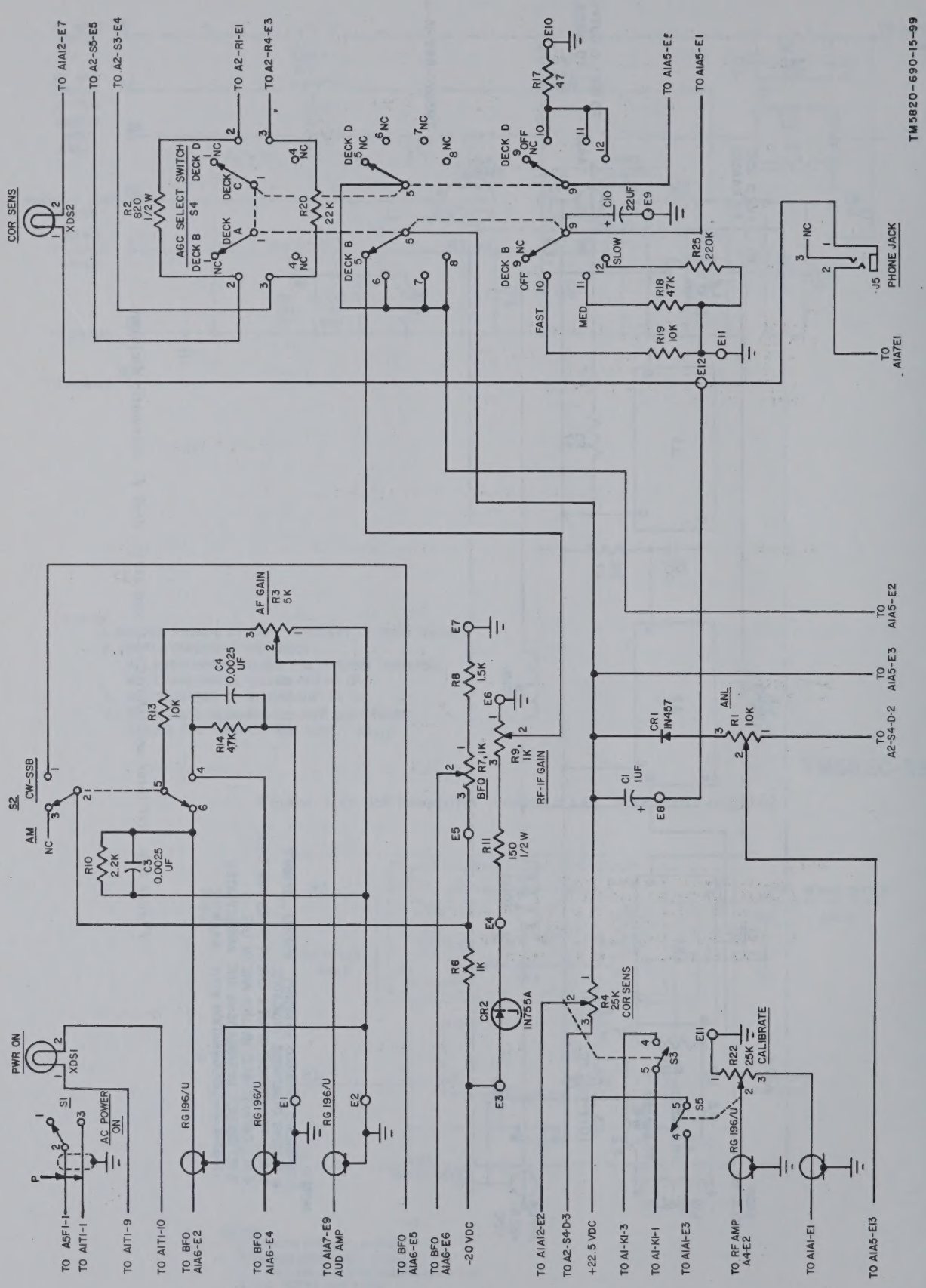

Figure 6-6. Receiver, Radio R-1421/URR, front panel 42, schematic diagram.

PUB NO. TM 11-5820-690-15

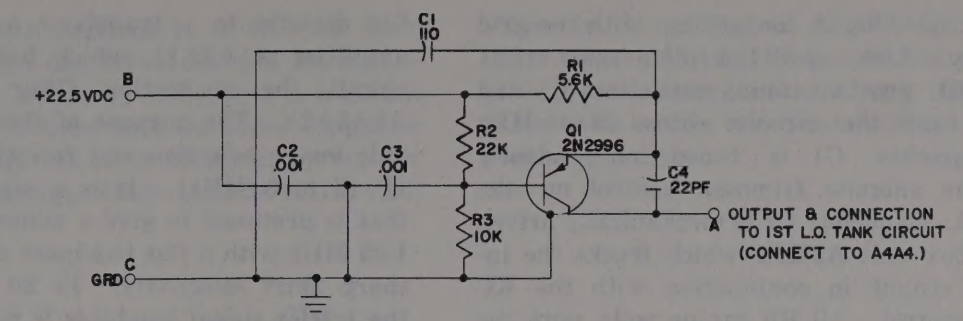

NOTE:
1. K=1,000 U=MICRO F=FARAD P=PICO W=WATT
2. UNLESS OTHERWISE SPECIFIED:
   ALL RESISTANCE VALUES ARE IN OHMS 1/4W ± 5%
   ALL CAPACITANCE VALUES ARE IN UF
   REFERANCE DESIGNATIONS ARE ABBREVIATED
   PREFIX THE DESIGNATION WITH A4A4A1

TM5820-690-15-11

Figure 6-7. 1st oscillator module A4A4A1, schematic diagram.

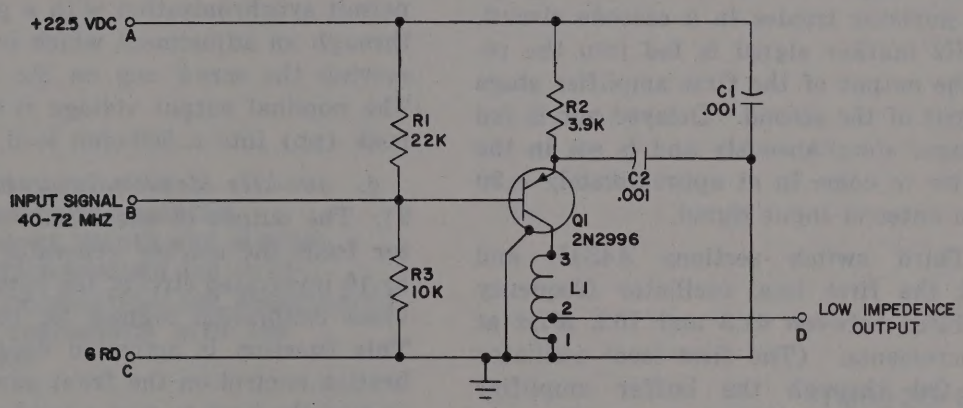

NOTES:
1. K=1,000 U=MICRO F=FARAD W=WATT
2. UNLESS OTHERWISE INDICATED:
   ALL RESISTANCE VALUES ARE IN OHMS 1/4W±5%
   ALL CAPACITANCE VALUES ARE IN UF
3. REFERENCE DESIGNATIONS ARE ABBREVIATED
   PREFIX THE DESIGNATION WITH A4A4A2

TM5820-690-15-12

Figure 6-8. Buffer modules A4A4A2 and A4A4A3, schematic diagram.

(3) Operating in conjunction with the grid (L1 through L30) and the plate coils (L31 through L60) are two tuning capacitors C1 and C2 which tune the circuits across the 1-MHz band. Capacitor C1 is tuned independently through the antenna trimmer control on the front panel. Capacitor C2 is mechanically driven from gearbox unit A3MP1 which tracks the input tuned circuit in conjunction with the KC TUNING control. All RF tuning coils, with the exception of the coils used on bands 1 through 3, have the tuning capacitors tapped at successively lower impedance points on the coil, to reduce the tuning rate of the tuning capacity on the higher frequency band and maintain a constant 1-MHz tuning range on all bands.

(4) The RF amplifier module A4A2 and 1st mixer assembly A4A3 combination has a conversion gain of 10 to 20 db and a nominal 3-db bandwidth of 500 kHz.

(5) RF amplifier module A4A2 employs two 6DS4 nuvistor triodes in a cascode circuit. The 100-kHz marker signal is fed into the receiver at the output of the first amplifier stage and the input of the second. Delayed agc is fed to both stages simultaneously and is set in the agc amplifier to come in at approximately —90 dbm of the antenna input signal.

(6) Third switch sections A4S1E and A4S1F set the first local oscillator frequency which operates between 41.5 and 70.5 MHz at 1-MHz increments. (The first local oscillator signal is fed through the buffer amplifier A4A3A2 to 1st mixer A4A3A1 preamplifier and band selector assembly A4.) The local oscillator signal generated at A4A4A1 is also fed through two series buffers A4A4A2 and A4A4A3 to a third buffer amplifier and feeds harmonic mixer driver A1A2A3 which isolates the harmonic mixer from the oscillator. The local oscillator signal level at this output of this amplifier should be approximately +10 ±5 dbm into 50 ohms on all bands.

b. 40-MHz 1st IF Amplifier and 2nd Mixer A1A3 (fig. 6-24). The 40-MHz 1st IF amplifier contains two active stages: 1st IF amplifier A1A3A1 and 2d mixer A1A3A3; and six-section helical resonator 1st IF filter A1A3A2 and a bandpass filter, 2d IF filter and matching network A1A3A4. The output of the 1st mixer in the preamplifier and band selector assembly is fed directly to a transistor amplifier (1st IF amplifier A1A3A1), which has in its collector circuit the six-section filter (1st IF filter A1A3A2). The purpose of this filter is to provide image rejection and rejection of the second IF (2 to 3 MHz). It is a stagger-tuned filter that is pretuned to give a nominal bandwidth of 1.25 MHz with a flat bandpass characteristic and sharp skirt selectivity. In 2d mixer A1A3A3, the 1-MHz signal bandpass is combined with the synthesized 37.5-MHz local oscillator signal from A1A11. The resulting 2- to 3-MHz IF signal is fed through a 2- to 3-MHz bandpass filter and matching pad (2d IF filter and matching network A1A3A4). The net conversion gain of the 40-MHz 2d IF mixer, filter, and attenuator is between 0 and ± 6db.

c. 1-MHz Crystal Reference Oscillator A1A10. The crystal reference oscillator is a sealed oscillator-oven package. The frequency accuracy is 1 MHz ±0.2 Hz. The oscillator is adjustable to permit synchronization with a primary standard through an adjustment which is available by removing the screw cap on the top of the unit. The nominal output voltage is 0.5 volt peak-to-peak (pp) into a 500-ohm load.

d. 100-kHz Marker Generator A1A1 (fig 6-9). The output of the I-MHz reference oscillator feeds the marker generator input, a divide-by-10 integrated circuit, the output of which provides calibration signals at 100-kHz intervals. This function is activated by turning the calibration control on the front panel to on and adjusting the level to give a good audible beat tone at the audio output.

e. Harmonic Generator and Mixer A1A2 (fig. 6-25). This assembly consists of four subunits the combined function of which is to synthesize a 2nd L.O., the frequency of which is approximately 37.5 MHz.

(1) *Spectrum generator A1A2A1* (fig. 6-25). The input is from 1-MHz reference oscillator A1A10. The spectrum generator produces a wideband spectrum of high order harmonics with snap diode A1A2A1CR2. The 1-MHz signal is applied to trimming potentiometer A1A2A1R6 which sets the level of the output spectrum. Two amplifiers are used: 1st amplifier A1A2A1Q1, a common emitter with a wideband 1-MHz amplifier; 2d amplifier A1A2A1Q2, an emitter follower which provides the power gain and low

driving impedance required to drive snap diode A1A2A1CR2. An agc signal derived from 37.5-MHz amplifier A1A11A1 maintains a constant output from 37.5-MHz local oscillator amplifier A1A11. The agc action is obtained by emitter degeneration through diode A1A2A1CR1 variations in the emitter of A1A2A1Q1. Spectrum drive control A1A2A1R6 presets the generator so that the maximum and minimum spectral components lie within the dynamic range of the level control circuitry.

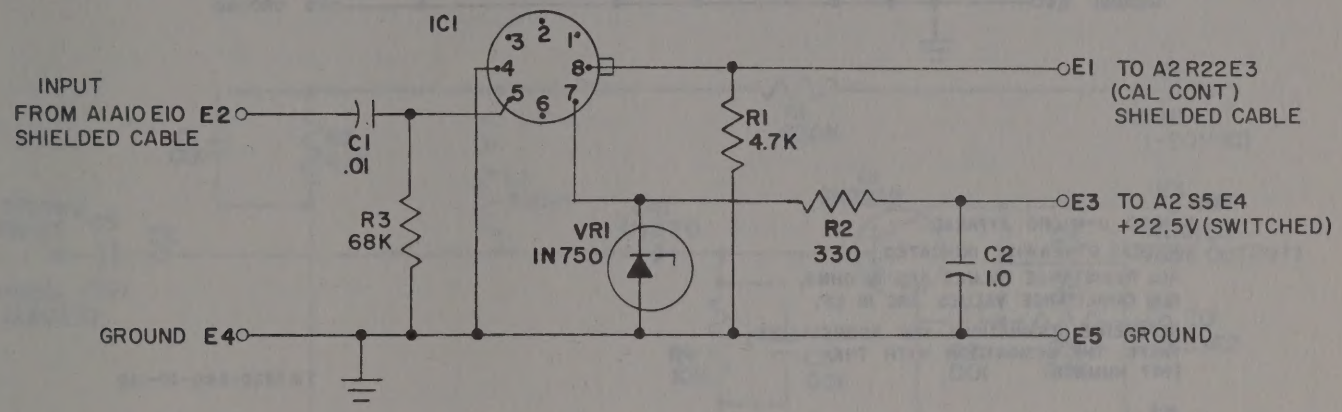

NOTES

K=1000 U=MICRO F=FARAD

1. UNLESS OTHERWISE INDICATED
   ALL RESISTANCE VALUES ARE IN OHMS
   ALL CAPACITANCE VALUES ARE IN UF
2. REFERENCE DESIGNATIONS ARE ABBREVIATED
   PREFIX THE DESIGNATION WITH THE
   UNIT NUMBER

TM5820-690-15-14

Figure 6-9. Marker generator (100-kHz) A1A1, schematic diagram.

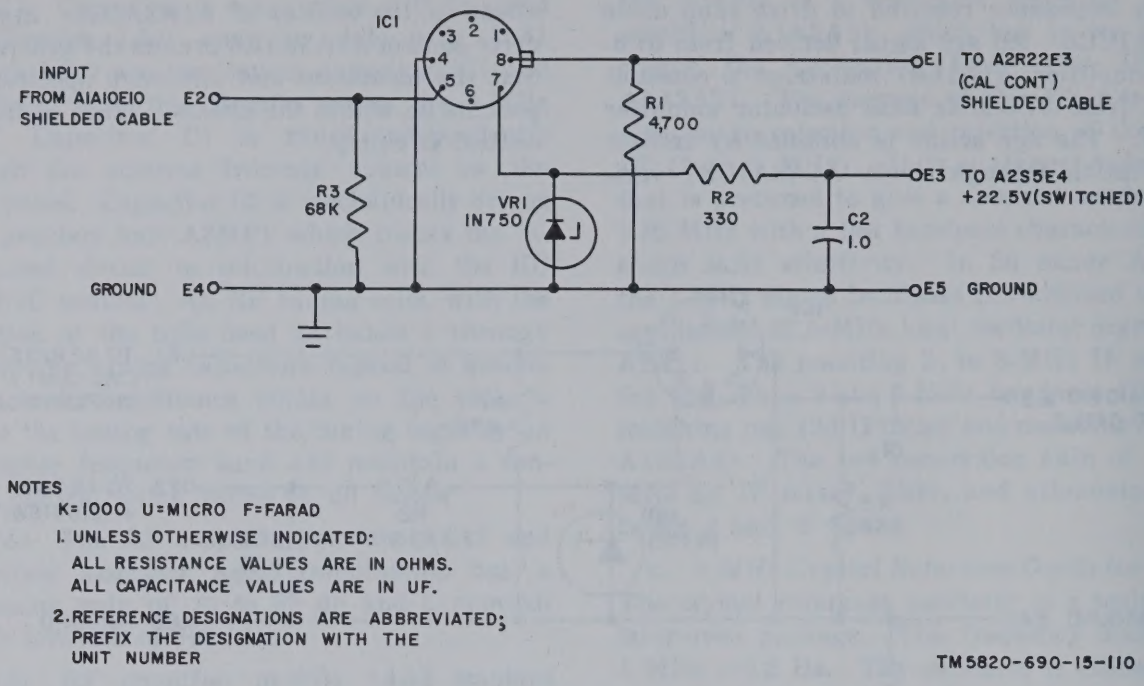

Figure 6-9.1. *Marker generator* (100-*kHz*) *A1A1, R-1421B/URR schematic diagram.*

(2) *4- to 34-MHz filter A1A2A2* (fig. 6-25). The spectrum generator A1A2A1 output has an excess of harmonics and wide variations in amplitude. Bandpass filter A1A2A2 selects and shapes the spectrum between 4 and 34 MHz. It also has a sharp roll-off above 34 MHz. This unit drives one part of harmonic mixer A1A2A4.

(3) *Harmonic mixer driver A1A2A3* (fig. 6-25). The harmonic mixer driver takes the 1st local oscillator input (41.5 to 70.5 MHz) from A4J3 and amplifies it, filters out any lower frequency components with a high-pass filter, and then supplies the local oscillator drive for harmonic mixer A1A2A4.

(4) *Harmonic mixer A1A2A4* (fig. 6-25). The harmonic mixer is a wideband, double-balanced mixer similar to 1st mixer assembly A4A3, the input and output impedances of which are nominally 50 ohms. The harmonic mixer mixes the 1st local oscillator signal with the shaped spectrum to get an output at 37.5 MHz. The local oscillator signal is suppressed approximately 25 db below its input level. This type of mixer gives a double-sideband, suppressed carrier output.

f. 37.5-MHz Local Oscillator Amplifier A1A11 (fig. 6-10 and 6-26). The 37.5-MHz local oscillator amplifier selects the 37.5-MHz translated spectral component generated at A1A2A4 output, raises it to a sufficient level to drive the 2d mixer, and rejects the undesired spectral components. The 37.5-MHz local oscillator amplifier consists of 37.5-MHz amplifier A1A11A1 and 37.5-MHz agc A1A11A2. The 37.5-MHz amplifier consists of synchronously tuned circuits, separated by amplifier stages. The first three stages are biased identically; the fourth and fifth are biased at successively larger quiescent currents to minimize nonlinearities from overloading. The signal is applied to a low impedance tap (50 ohms) on the input transformer, stepped up for selectivity, and stepped back down to a lower impedance (approximately 20 ohms) to match the input of the ground-base amplifier. Each stage has approximately 12 db of gain to provide an overall gain of 60 db. The 3-db bandwidth is approximately 220 kHz, and the 60-db bandwidth is 2 MHz. The 37.5-MHz signal provides the local oscillator signal for the 2nd mixer in the 40-MHz 1st IF and 2nd mixer A1A3. The 37.5-MHz agc adjusts the output of 37.5-MHz local oscillator amplifier A1A11 by adjusting the amplitude of spectrum generator A1A2A1 which, in turn, adjusts the input into 37.5-MHz local oscillator amplifier A1A11. The

37.5-MHz agc consists of a detector amplifier and a filter which generate a direct current (dc) level proportional to the output of 37.5-MHz local oscillator amplifier A1A11 by sampling the output through a coupling capacitor.

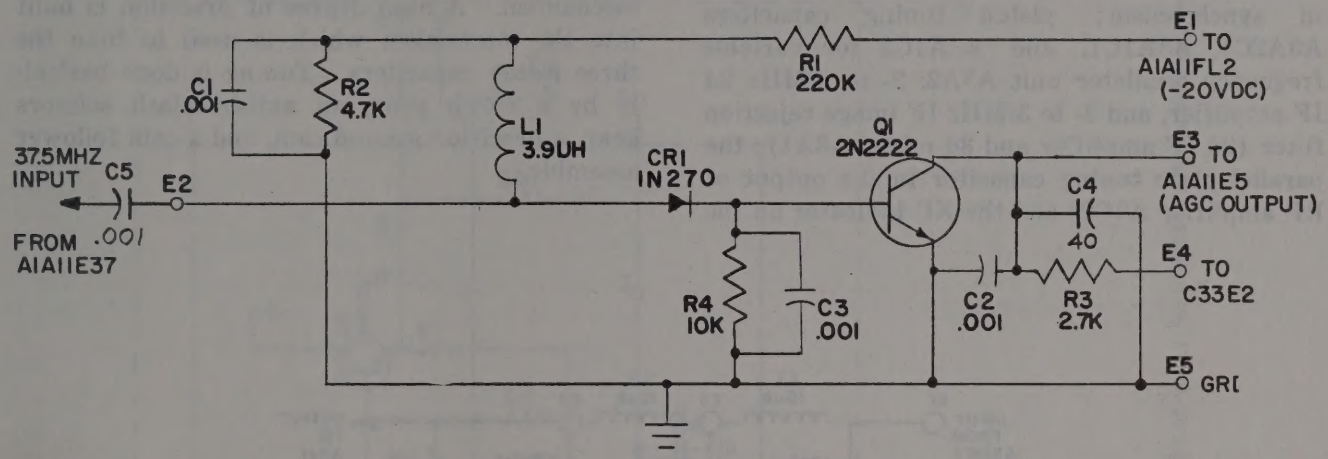

NOTES
1. F=FARAD K=1,000 U=MICRO H=HENRY W=WATT
2. UNLESS OTHERWISE SPECIFIED:
   ALL RESISTANCE VALUES ARE IN OHMS 1/4W ± 5%
   ALL CAPACITANCE VALUES ARE IN UF
3. REFERENCE DESIGNATIONS ARE ABBREVIATED
   PREFIX THE DESIGNATION WITH A1A11

TM5820-690-15-17

Figure 6-10. 37.5-kHz agc A1A11A2, schematic diagram.

g. 2d IF Tuning Unit A3 (fig. 6-11, 6-12, and 6-27). The 2d IF tuning unit is a major subassembly and consists of gearbox unit A3MP1, 2d IF amplifier and 3d mixer A3A1, and variable frequency oscillator unit A3A2.

(1) *Gearbox unit A3MP1.* The gearbox unit is the mechanism which provides continuous tuning over the 1-MHz band which is selected by the MC TUNING control. The gearbox unit actuates the following tuning devices in synchronism: piston tuning capacitors A3A2C1, A3A1C1, and A3A1C2 for variable frequency oscillator unit A3A2, 2- to 3-MHz 2d IF amplifier, and 2- to 3-MHz IF image rejection filter (2d IF amplifier and 3d mixer A3A1); the parallel plate tuning capacitor in the output of RF amplifier A4C2; and the KC indicator on the front panel. The gearbox unit has two input shafts, the KC TUNING shaft and the FINE TUNING (R-1421A/URR or CAL ADJ (R-1421B/URR) shaft, the latter being a 20:1 gear reduction of the former. The FINE TUNING adjustment is also used as a calibration adjustment. Calibration of the frequency readout is accomplished by depressing and tuning the FINE TUNING shaft which allows the readout counter to be turned independently of the gear drive mechanism. A high degree of precision is built into the mechanism which is used to tune the three piston capacitors. Tuning is done basically by a worm gear, an anti-backlash scissors gear, a precision ground cam, and a cam follower assembly.

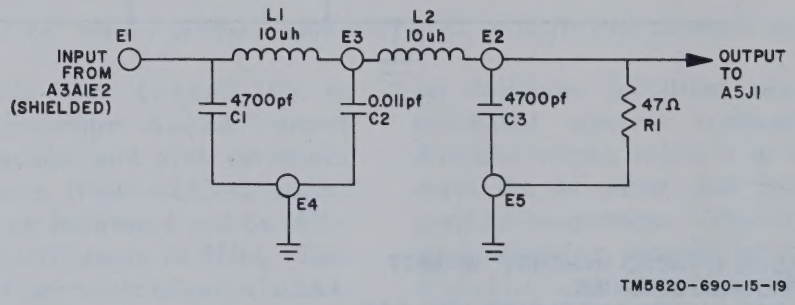

Figure 6-11. Signal indicating receiver (SIR) filter A5A2, schematic diagram.

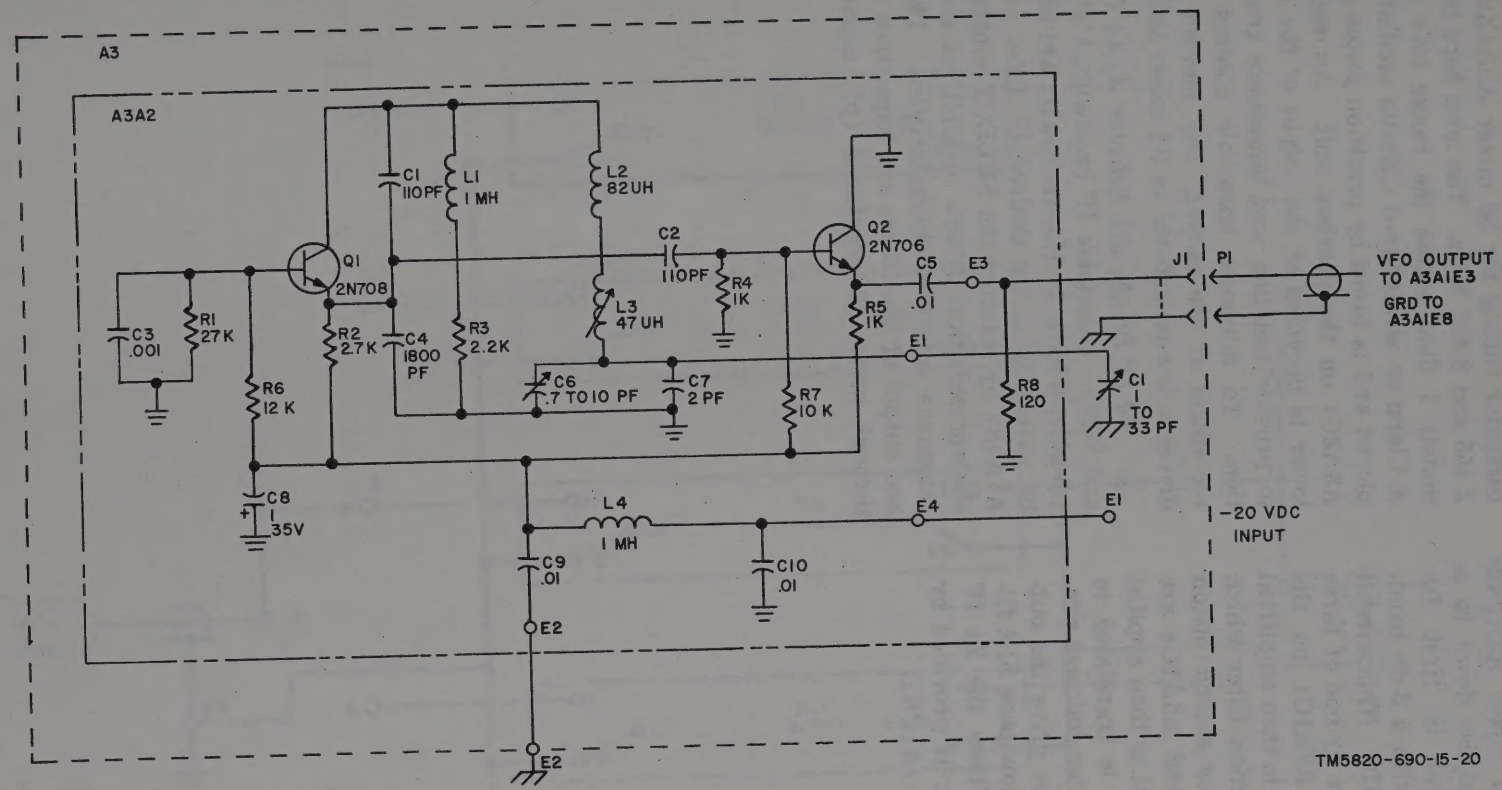

NOTES:
1. F=FARAD K=1000 P=PICO U=MICRO H=HENRY M=MILLI
2. UNLESS OTHERWISE SPECIFIED.
   ALL RESISTANCE VALUES ARE IN OHMS 1/4W ± 5%
   ALL CAPACITANCE VALUES ARE IN UF.
3. REFERENCE DESIGNATIONS ARE ABBREVIATED.
   PREFIX THE DESIGNATION WITH THE UNIT NUMBER WITH A3 OR A3A2 AS APPLICABLE.

Figure 6-12. Variable frequency oscillator (3d L.O.) unit A3A2, schematic diagram.

(2) *2d IF amplifier and 3d mixer A3A1* (fig. 6-27). The 2- to 3-MHz IF amplifier (2d IF amplifier A3A1A1) and 3d mixer A3A1A2 converts the 2- to 3-MHz bandpass down to a single 455-kHz IF. The signal is first filtered through a tuned circuit with a 3-db bandwidth of approximately 200 kHz. This circuit is tuned across the 1-MHz range by one of three cam-driven piston capacitors A3A1C1 on the gear drive assembly. The signal is then amplified and fed into an IF image rejection filter which is tracked from 2 to 3 MHz by second piston capacitor A3A1C2; A3A1C3 and A3A1C4 are trimming capacitors. The signal is then applied to 3d mixer A3A1A2 where it is translated to 455 kHz, the final IF. An emitter follower provides a low impedance output to drive the output at rear deck A5J1 through low-pass SIR filter A5A2 (fig. 6-11), which filters the 2d IF and to IF filters A1A3A4. Agc is provided by emitter degeneration diode A3A1A1CR1.

(3) *Variable frequency oscillator (vfo) A3A2* (fig. 6-12). The vfo provides continuous oscillator tuning for 3d mixer A3A1A2 between 2.455 and 3.455 MHz. The level here is approximately 1 dbm across the range into 50 ohms. A Clapp or series-tuned Colpitts oscillator is employed and is tuned by precision piston capacitor A3A2C1 on the gearbox unit. An emitter follower is provided at the output of the oscillator to provide isolation and impedance transformation. To minimize harmonic content of the waveform at the output, the emitter follower drives a low-pass filter in 3d mixer A3A1A2.

h. 3d IF Bandwidth Selector A1A4 (fig. 6-13 and 7-27). Selectable IF bandwidths of 500 Hz, 1.5 kHz, 3 kHz, 6 kHz, or 12 kHz are obtainable by switching in the desired IF filter on switch A1A4S7 by rotating the SELECT control. These electromechanical filters exhibit excellent off-resonance rejection characteristics. The input and output of the filters are impedance matched through series 130-picofarad (pf) capacitors.

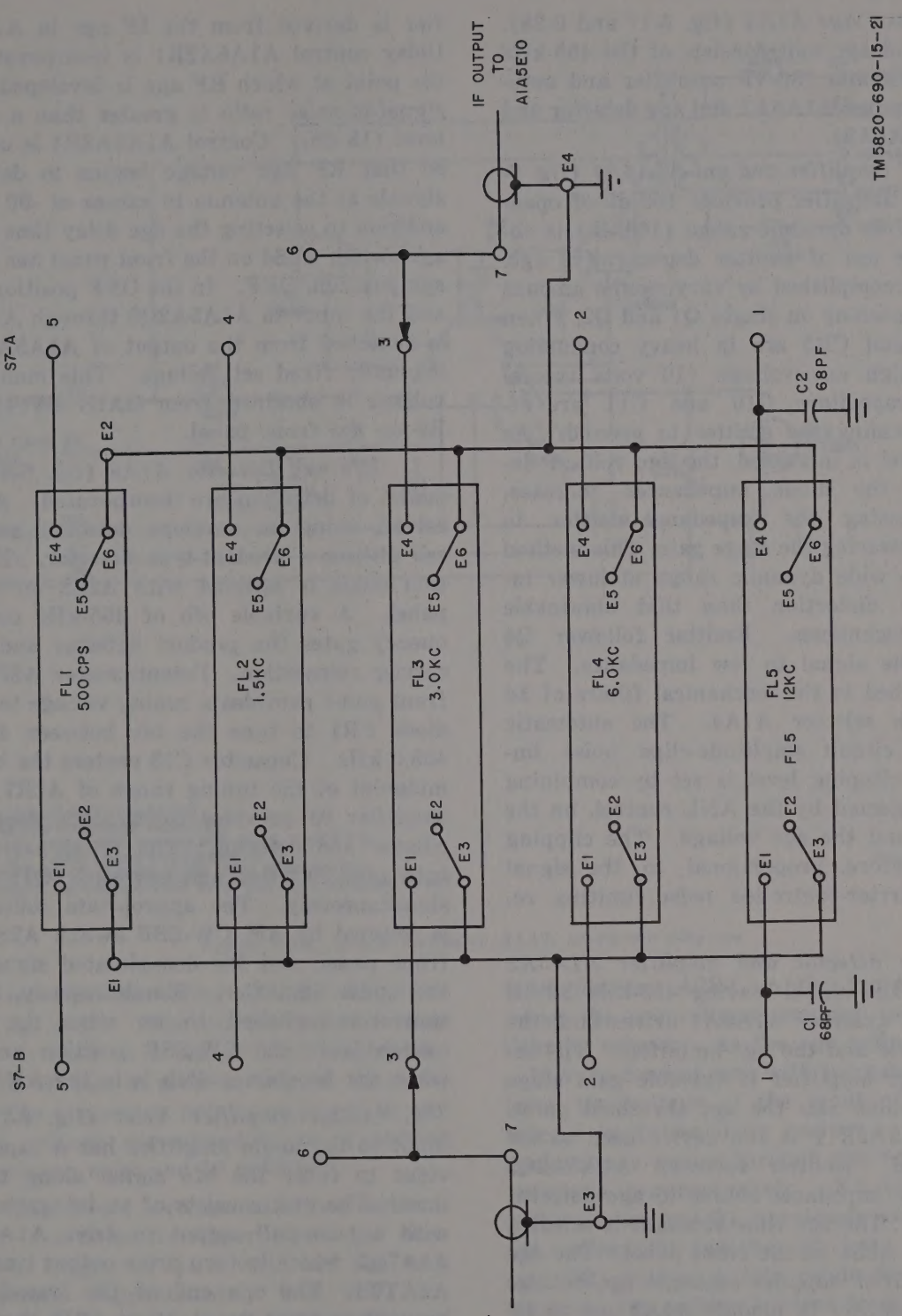

Figure 6-13. 3d IF bandwidth selector (455 kHz) A1A4, schematic diagram.

i. 3d IF and Agc A1A5 (fig. 6-11 and 6-28). The 3d IF and agc unit consists of the 455-kHz IF and anl circuits (3d IF amplifier and automatic noise limiter A1A5A1 and agc detector and amplifier A1A5A2).

(1) *3d IF amplifier and anl A1A5A1* (fig. 6-28). The IF amplifier provides 100 db of open-loop gain. Wide dynamic range (100 db) is obtained by the use of emitter degenerative agc. This use is accomplished by varying the amount of emitter bypassing on stages Q1 and Q2. When diodes CR4 and CR5 are in heavy conduction because of high agc voltage (10 volts typical maximum), capacitors C10 and C11 are effectively bypassing the emitter to ground. As the signal level is increased, the agc voltage decreases and the diode impedances increase, thereby increasing the impedance emitter to ground and lowering the stage gain. This method of agc offers wide dynamic range at lower intermodulation distortion than that obtainable with other techniques. Emitter follower Q4 transforms the signal to low impedance. The input is matched to the mechanical filters of 3d IF bandwidth selector A1A4. The automatic noise limiter circuit amplitude-clips noise impulses. The clipping level is set by combining the voltage selected by the ANL control, on the front panel, and the agc voltage. The clipping level is, therefore, proportional to the signal level, and carrier-controlled noise limiting results.

(2) *Agc detector and amplifier A1A5A2* (fig. 6-29). The signal leaving 455-kHz 3d IF amplifier and analyzer A1A5A1 drives both the detector module and the agc amplifier. The input of the agc amplifier is variable gain stage A1A5A2Q1 which sets the agc threshold point. Resistor A1A5A2R11 is the device used to set this threshold. Emitter follower A1A5A2Q2 supplies a low impedance source to agc detector A1A5A2CR1. The agc time constant is selected at agc switch A2S4 on the front panel. The agc detector amplifier supplies separate agc voltage to the RF amplifier in module A4A2 and to IF amplifiers A1A5A1 and A3A1A1. The IF agc voltage is derived through A1A5A2Q3, A1A5A2Q4, and A1A5A2Q5 and is approximately —10 volts with no RF signal present and drops toward 0 volt with maximum RF signal. The RF amplifier is derived from the IF agc in A1A5A2Q6. Delay control A1A5A2R1 is incorporated to set the point at which RF agc is developed until the signal-to-noise ratio is greater than a minimum level (15 db). Control A1A5A2R1 is usually set so that RF agc voltage begins to develop for signals at the antenna in excess of -90 dbm. In addition to selecting the agc delay time constant, agc switch A2S4 on the front panel has a manual agc position, OFF. In the OFF position, the agc and the input to A1A5A2Q6 through A1A5A2R1 is switched from the output of A1A5A2Q5 to a manually fixed set voltage. This manually set voltage is obtained from GAIN RF/IF control R9 on the front panel.

j. Bfo and Detector A1A6 (fig. 6-30). Two modes of detection are incorporated. Am. is received, using an envelope detector, and cw or ssb utilizes a product-type detector. The detection mode is selected with A2S2 on the front panel. A variable bfo of 455-kHz center frequency gates the product detector and supplies carrier reinsertion. Potentiometer A2R7 on the front panel provides a tuning voltage to varactor diode CR1 to tune the bfo between 452.0 and 458.0 kHz. Capacitor C13 centers the bfo at the midpoint of the tuning range of A2R7. Buffer amplifier 03 provides isolation between the oscillator and detector. The IF signal is fed to both product (Q4) and envelope (Q1) detectors simultaneously. The appropriate collector load is selected by AM/CW-SSB switch A2S2 on the front panel, and the demodulated signal fed to the audio amplifier. Simultaneously, the BFO control is switched to on when the function switch is in the CW-SSB position and to off when the function switch is in the AM position.

k. Audio Amplifier A1A7 (fig. 6-14). The input to the audio amplifier has a capacitor divider to filter the bfo signal along the audio lines. The unit consists of an integrated circuit with a push-pull output to drive A1A7Q1 and A1A7Q2, which in turn drive output transformer A1ATT1. The one end of the transformer is brought to front panel A2 to A2J5 through 6.8-kilohm resistor for the high impedance output. The 600-ohm output of the transformer goes to A5J4 in the back panel. Resistor A1A7R6 is selected to minimize crossover distortion.

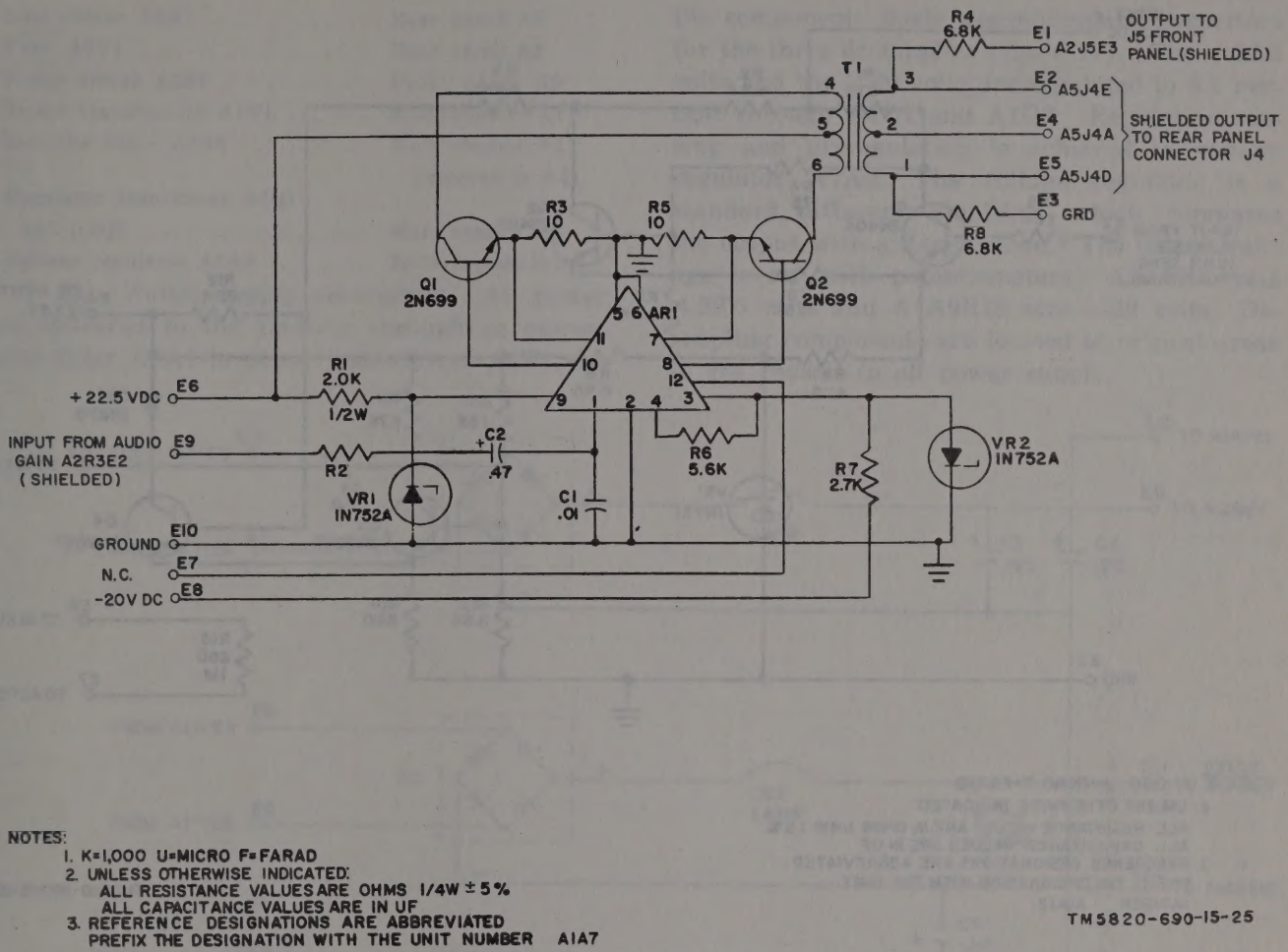

NOTES:
1. K=1,000 U=MICRO F=FARAD
2. UNLESS OTHERWISE INDICATED:
   ALL RESISTANCE VALUES ARE OHMS 1/4W ± 5%
   ALL CAPACITANCE VALUES ARE IN UF
3. REFERENCE DESIGNATIONS ARE ABBREVIATED
   PREFIX THE DESIGNATION WITH THE UNIT NUMBER A1A7

TM5820-690-15-25

Figure 6-14. Audio amplifier A1A7, schematic diagram.

l. Carrier-Operator Relay (C.O.R.) Amplifier A1A12 (fig. 6-15). The carrier-operated relay amplifier is used as a signal level sensing device. The IF agc is used to trigger the c.o.r. circuit. The triggering point can be set to any threshold voltage corresponding to a carrier voltage between noise and 50 millivolts.

(1) The circuit is composed of two sections. The first is a Schmitt trigger which has been designed to trigger at +3.5 volts and has very low hysteresis (approximately 0.05 volt) between the turn-on and turn-off levels. The agc voltage is added to a fixed positive voltage (+22.5-volt supply) through A1A12R5 and A2R4 on the front panel. The c.o.r. sensitivity potentiometer A2R4 on the front panel determines the agc voltage required to operate the Schmitt trigger. As the agc voltage falls from −10 volts toward zero with increasing RF signal level, the voltage at the input of the Schmitt trigger is driven more positive. As this summed voltage passes through the Schmitt trigger threshold (approximately +3.5 volts), the circuit switches and Q1, previously saturated, turns off. When Q1 switches on, base current flows into Q2, driving it into conduction. When Q2 conducts, the emitter current from Q2 raises the emitter voltage of Q1, holding Q1 cut off until the input voltage again swings below (more negative) +3.5 volts.

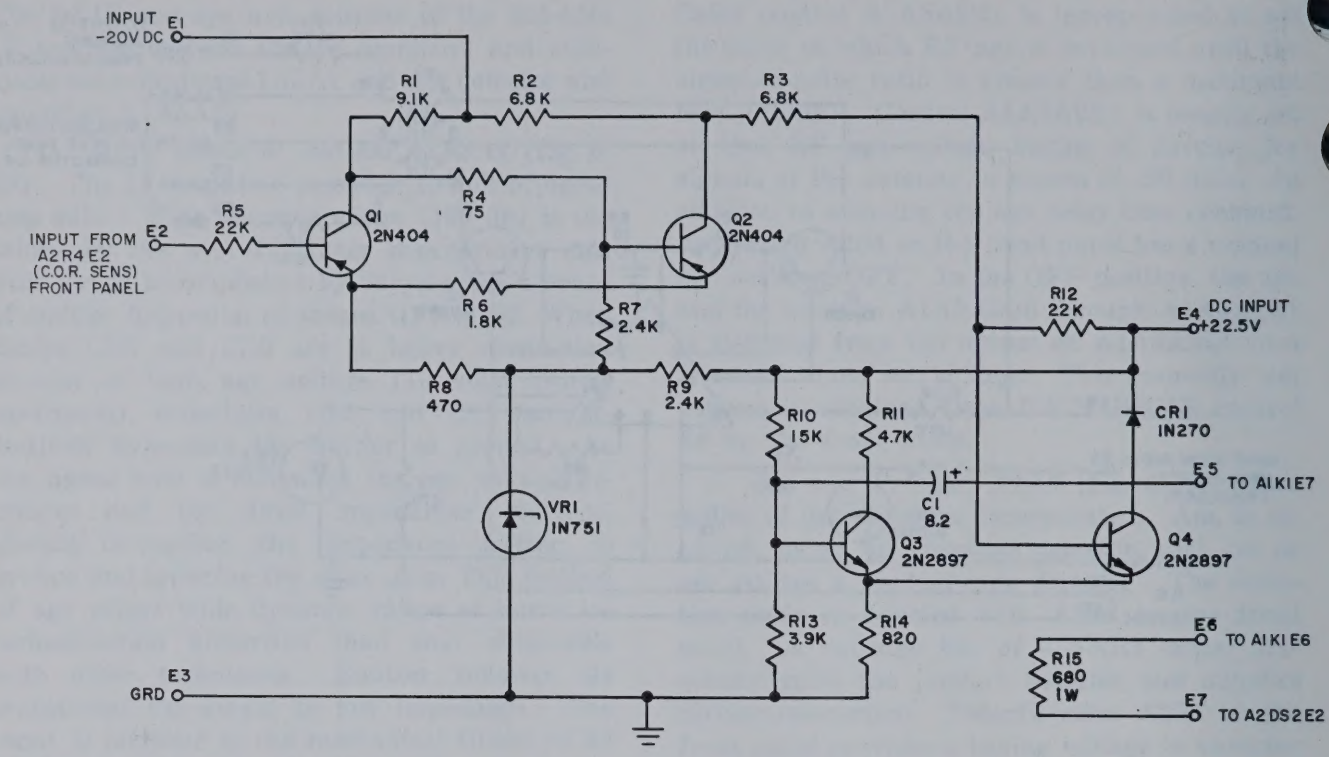

NOTES
1. K=1000 U=MICRO F=FARAD
2. UNLESS OTHERWISE INDICATED:
   ALL RESISTANCE VALUES ARE IN OHMS 1/4W ±5%
   ALL CAPACITANCE VALUES ARE IN UF
3. REFERENCE DESIGNATIONS ARE ABBREVIATED PREFIX THE DESIGNATION WITH THE UNIT NUMBER A1A12

Figure 6-15. Carrier-operated relay amplifier A1A12, schematic diagram.

(2) The second transistor pair forms a monostable multivibrator. Stage Q4, which keys relay A1K1, receives its biasing from Q2. The base of Q4 is held cut off by current flowing from the 20-volt bias through R2 and R3. When Q2 switches, collector current is allowed to flow through Q4, raising the emitter voltage on Q3 and tending to bias off Q3. Meanwhile, capacitor C1, with the initial charge of 20 volts, forces a negative current into the base of Q3, further turning it off. Capacitor C1 now maintains a zero charge. When the Schmitt trigger recycles, Q2 ceases conduction and, in turn, Q4 is biased to cutoff, but capacitor C1, with zero charge, must charge up again through the coil of K1. This action delays the dropout of K1 for approximately 65 milli-seconds (ms). When K1 is closed, current from the +22.5-volt line flows through indicator DS2 on the front panel. The c.o.r. is disabled by disconnecting the positive supply through R4 with c.o.r. switch S3.

m. Rectifier Filter A1A8 and Voltage Regulator A1A9 (fig. 6-16 through 6-19). Units A1A8 and A1A9 constitute the complete power supply for the HF receiver.

(1) *Power consumption.* The following voltages used in the HF receiver, and their approximate load currents are given in the chart below.

Power load distribution

Voltage	*Ratings (ma)*
100 vdc unregulated	10
6.3 vac unregulated	300
117 vac (oven) unregulated	85
+22.5 vdc regulated	230
−20 vdc regulated	180

(2) *Power supply component location.* All power, except the 110-volt ac designated oven, is supplied by power transformer T1. The breakdown of power supply components follows.

Subassembly designation	*Location*
Power connector A5J3	Rear panel A5
Line filters A5A1	Rear panel A5
Fuse A5F1	Rear panel A5
Power switch A2S1	Front panel A2
Power transformer A1T1	Main chassis A1
Rectifier filter A1A8	Main chassis A1 (secured to A4).
Regulator transistors A1Q1 and A1Q2	Main chassis A1
Voltage regulator A1A9	Main chassis A1

(3) *Power supply description.* All power is delivered to the receiver through ac power-line filter A5A1 to power transformer A1T1, except the voltage required to operate the crystal oscillator oven. Rectifier filter A1A8 contains the components diode assemblies and capacitors for the three dc supplies (fig. 6-17). The +22.5 volts and the —20 volts are regulated to 0.1 percent through A1Q1 and A1Q2. Regulation sensing and preregulation is achieved in voltage regulator A1A9. The voltage regulator is a standard difference-amplifier which compares the output with a Zener diode. The output voltage is set with potentiometers: A1A9R7 sets +22.5 volts and A1A9R18 sets —20 volts. Decoupling components are located at critical areas in the chassis in all power supply.

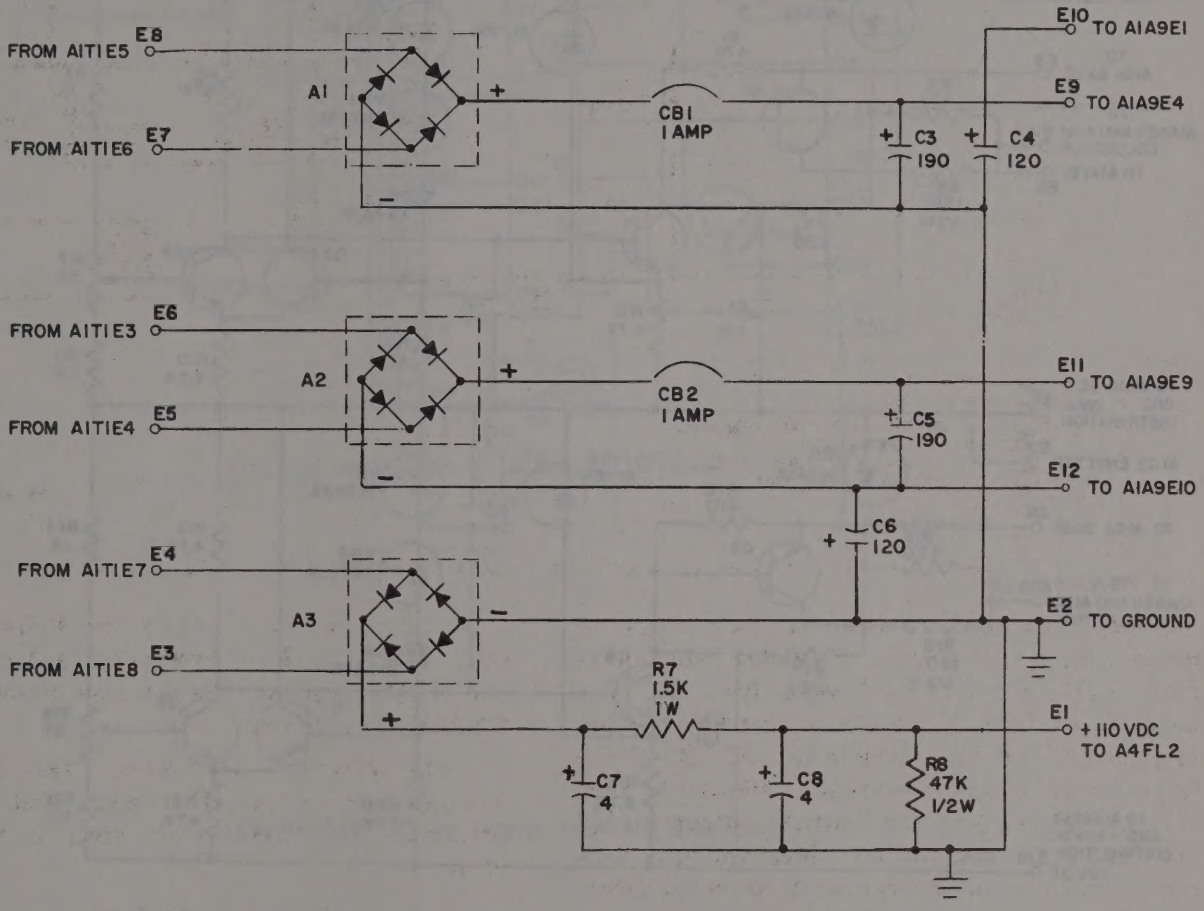

NOTES:
1. K = 1,000 U = MICRO F = FARAD W = WATT
2. UNLESS OTHERWISE INDICATED:
   ALL RESISTANCE VALUES ARE IN OHMS
   ALL CAPACITANCE VALUES ARE IN UF
3. REFERENCE DESIGNATIONS ARE ABBREVIATED
   PREFIX THE DESIGNATION WITH THE
   UNIT NUMBER A1A8

TM5820-690-15-27

Figure 6-16. Rectifier filter A1A8, schematic diagram.

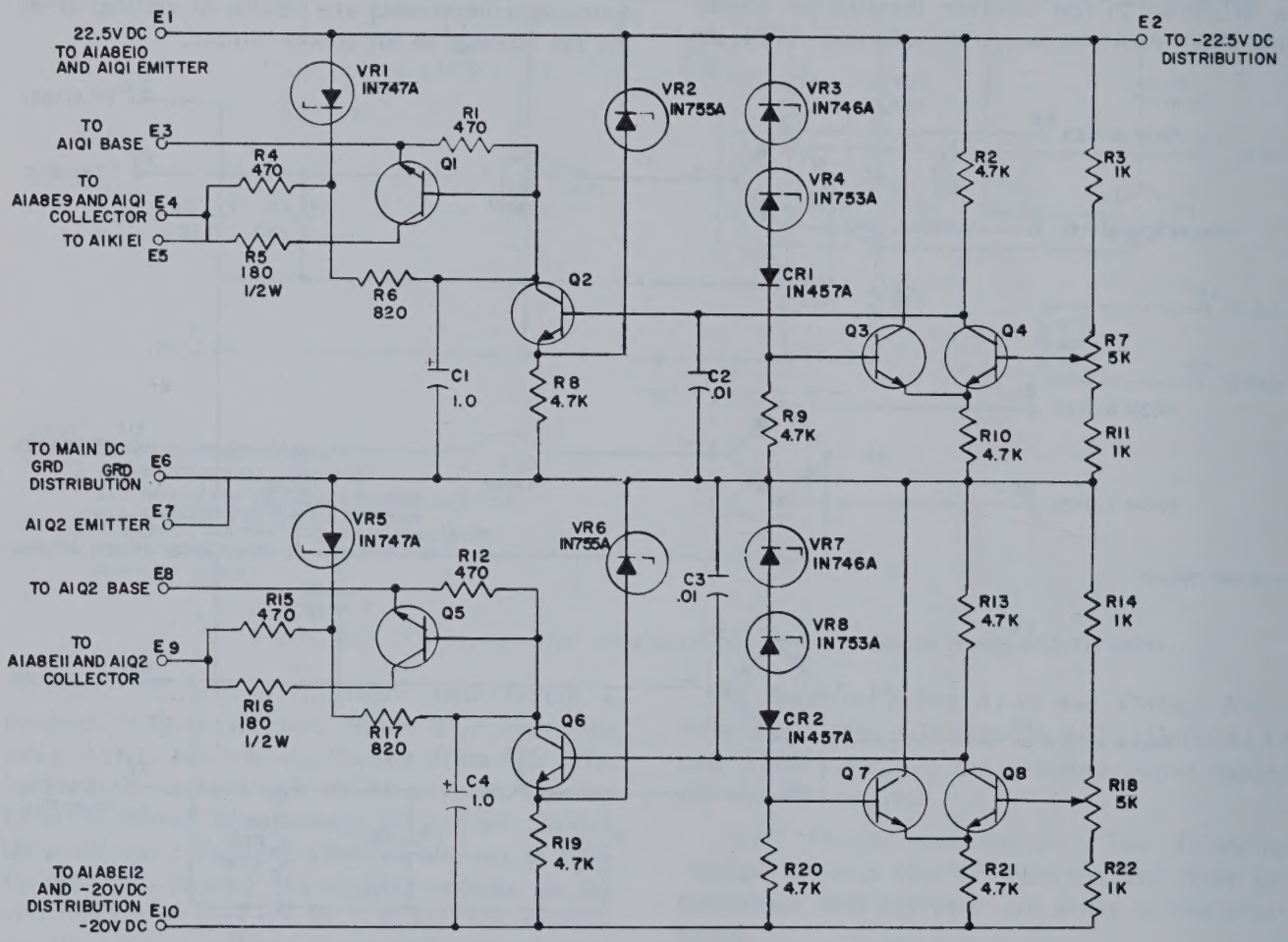

NOTES

1. K=1000 PF=PICOFARAD U=MICO W=WATT
2. UNLESS OTHERWISE INDICATED
   ALL RESISTANCE VALUES ARE IN OHMS 1/4W ±5%
   ALL CAPACITANCE VALUES ARE IN UF
3. REFERENCE DESIGNATIONS ARE ABBREVIATED PREFIX THE DESIGNATION WITH UNIT NUMBER A1A9
4. ALL TRANSISTORS ARE 2N2222.

TM5820-690-15-28

Figure 6-17. Voltage regulator A1A9, schematic diagram.

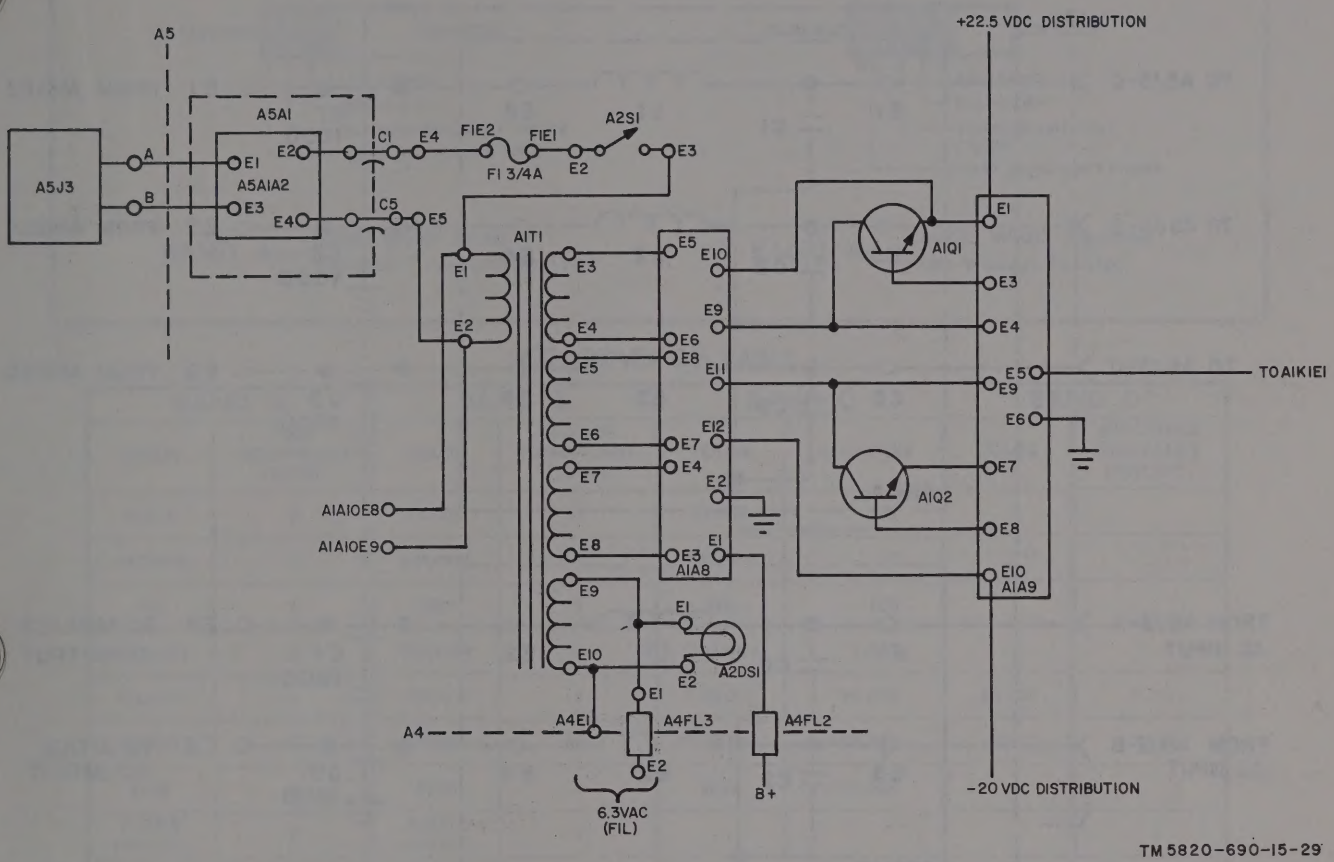

Figure 6-18. Power supply, schematic diagram.

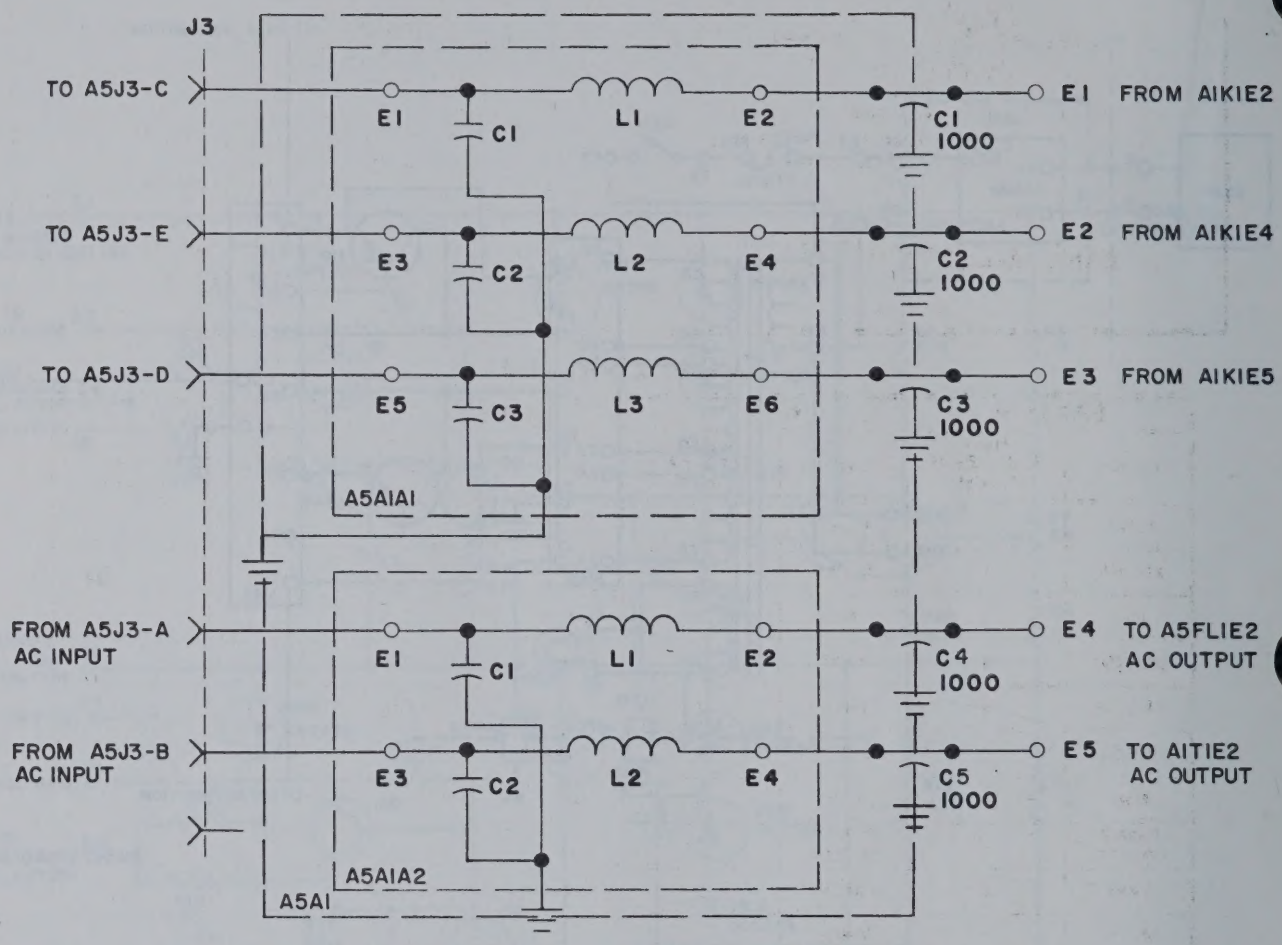

NOTES

1. F = FARAD H = HENRY U = MICRO
2. UNLESS OTHERWISE INDICATED:
   ALL CAPACITANCE VALUES ARE IN UF
   ALL CAPACITORS ARE 0.1 UF
   ALL COILS ARE 0.22 UH
3. REFERENCE DESIGNATION ARE ABBREVIATED.
   PREFIX THE DESIGNATION WITH UNIT NUMBER

TM5820-690-15-30

Figure 6-19. Ac powerline filter A5A1, schematic diagram.

COLOR CODE MARKING FOR MILITARY STANDARD RESISTORS

COMPOSITION-TYPE RESISTORS

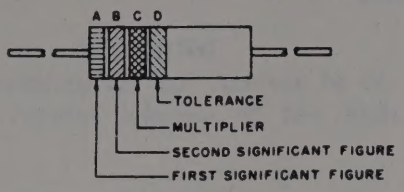

BAND A— Equal Width Band Signifies Composition-Type

WIREWOUND-TYPE RESISTORS

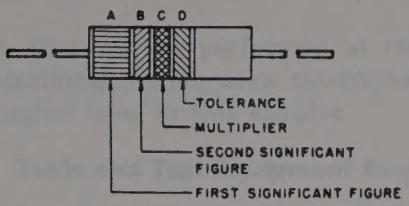

BAND A— Double Width Signifies Wire-wound Resistor

COLOR CODE TABLE

BAND A		BAND B		BAND C		BAND D*	
COLOR	FIRST SIGNIFICANT FIGURE	COLOR	SECOND SIGNIFICANT FIGURE	COLOR	MULTIPLIER	COLOR	RESISTANCE TOLERANCE (PERCENT)
BLACK	0	BLACK	0	BLACK	1		
BROWN	1	BROWN	1	BROWN	10		
RED	2	RED	2	RED	100		
ORANGE	3	ORANGE	3	ORANGE	1,000		
YELLOW	4	YELLOW	4	YELLOW	10,000	SILVER	± 10
GREEN	5	GREEN	5	GREEN	100,000	GOLD	± 5
BLUE	6	BLUE	6	BLUE	1,000,000		
PURPLE (VIOLET)	7	PURPLE (VIOLET)	7				
GRAY	8	GRAY	8	SILVER	0.01		
WHITE	9	WHITE	9	GOLD	0.1		

EXAMPLES OF COLOR CODING

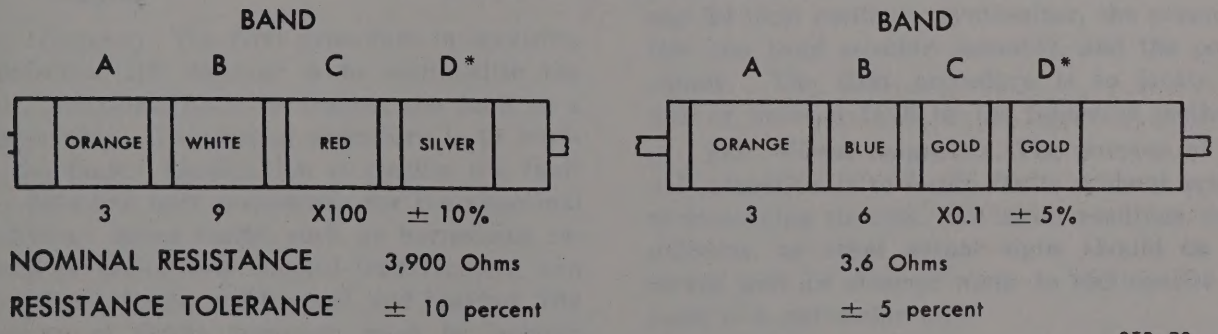

*If Band D is omitted, the resistor tolerance is ±20%, and the resistor is not Mil-Std.

Figure 6-20. Color code markings for MIL-STD resistors.

CHAPTER 7

DS, GS, AND DEPOT TROUBLESHOOTING

Section I. GENERAL

WARNING

When servicing the LF receiver be extremely careful because of the high voltages.

7-1. Scope of Troubleshooting

The maintenance procedures in this chapter are supplemented by procedures described under organizational maintenance in this manual. The systematic troubleshooting procedure, which begins with the operational and sectionalization checks that can be performed at operator and organizational maintenance categories, is carried to a higher level in this chapter.

7-2. Tools and Test Equipment Required

All tools and test equipment required for troubleshooting and alignment listed here are used in this chapter and chapter 8. Subsequent listings will be by common name with reference to this paragraph.

Item	*TM Reference*	*Common name*
Digital Multimeter AN/USM-303		Digital multimeter
Frequency Counter AN/USM-207	TM 11-6625-700-10	Frequency counter
Generator, Signal AN/GRM-50	TM 11-6625-573-15	RF generator
Generator, Sweep AN/USM-203	TM 11-6625-1599-15	Sweep generator
Headset HS-33	TM 11-5965-269-50	Headset
Multimeter ME-26D/U	TM 11-6625-200-15	Vtvm
Multimeter TS-352B/U	TM 11-6625-366-15	Multimeter
Oscilloscope AN/USM-140A	TM 11-6625-535-15	Oscilloscope
Variable Attenuator CN-796/U (2 ea)		Attenuator
Voltmeter, Electronic AN/URM-145	TM 11-6625-524-14; TM 11-6625-524-15-1.	Voltmeter
Voltmeter, Electronic ME-30E/U	TM 11-6625-320-12	Output power meter
Tool Kit, Electronic Equipment TK-100/G	SM 11-4-5180-R13	Tool kit #1
Tool Kit, Operations Central TK-101/G	SM 11-4-5180-R13	Tool kit #2
Generator, Signal AN/URM-127	TM 11-6625-683-15	Audio oscillator

7-3. Organization of Troubleshooting Procedures

a. General. The first procedure in servicing a defective HF receiver is to sectionalize the fault. Sectionalization is tracing the fault to a subassembly. The second procedure is to localize the fault. Localization is tracing the fault to a defective part responsible for the abnormal condition. Some faults, such as burned-out resistors or arcing and shorted transformers, can often be located by sight, smell, and hearing. The majority of faults, however, must be isolated by checking voltages and resistances.

b. Sectionalization. Listed below is a group of tests arranged to reduce unnecessary work and to aid in tracing trouble in a defective HF receiver. The HF receiver consists of four sections: the basic receiver, the 40-MHz 1st IF and 2d local oscillator synthesizer, the preamplifier and band selector assembly, and the power supply. The first procedure is to locate the unit or units at fault by the following methods:

(1) *Visual inspection.* The purpose of visual inspection is to locate faults without testing or measuring circuits. All meter readings, scope patterns, or other visual signs should be observed and an attempt made to sectionalize the fault to a particular unit.

(2) *Operational tests.* Operational tests frequently indicate the general location or trouble. In many instances, the tests will help in determining the exact nature of the fault. A

good operational test is to check the unit operation as indicated in (4) below. Testing instructions can be found in (3) below and in chapter 8 under the proper function.

(3) *Equipment performance tests.*

Step No.	*Item*	*Procedure*
1	Sensitivity	*a.* Connect HF receiver and test equipment as shown in figure 7-49. Set HF receiver front panel controls as follows: (1) CAL control to OFF. (2) C.O.R. SENS control to OFF. (3) GAIN RF/IF control to maximum. (4) ANL control to OFF. (5) AGC switch to FAST. (6) SELECT bandwidth switch to 3 kc. (7) AM/CW-SSB function switch to AM. (8) GAIN AF switch to on position. *b.* Set the HF generator to each of the frequencies below with 1-kHz 30% modulation. Adjust HF generator vtvm to indicate 10 db S + N/N for each selected frequency and the output RF power for each frequency. *Frequency* — *Minimum sensitivity* 1.5 MHz .... 1.4 μv 105 dbm 10.5 MHz .... 1.4 μv 105 dbm 20.5 MHz .... 1.4 μv 105 dbm 30.5 MHz .... 1.4 μv 105 dbm
2	Dynamic range check.	*a.* Maintain same test setup as in item 1. Set HF receiver front panel controls as follows: Repeat item 1 except set SELECT bandwidth switch to 6 kc. *b.* Set RF generator to 15.5 MHz with 1-kHz 30% modulation. Measure the audio rms output at the specified RF levels (input to receiver from HF generator). All rms outputs should be within 3 db of each other. *RF level* — *Rms output* —110 dbm —90 dbm —50 dbm —10 dbm

(4) *Equipment performance checklist.*

Item	*Result*
Frequency	1 to 31 MHz (30 bands).
Calibration accuracy	Better than 2.0 kHz when referred to nearest 100-kHz check point.
Sensitivity (minimum)	Am.: 105 dbm, 10 db (3-kHz bandwidth, 30% mod); cw: 112 dbm, 10 db (3-kHz bandwidth).
Selectivity	0.5, 1.5, 3.0, 6.0, and 12.0 kHz.
IF rejection	75 db.
Agc characteristic:	
Output constancy .	Af output within 3 db from 1 to 50,000 uv.

NOTE

Agc is effective on cw and ssb, as well as for am. signals.

Af output	250 mw, 600-ohm balanced, rear panel; 20 mw to phone jack, front panel.
Bfo	Tunable ±3 kHz.
Noise limiter	Carrier-controlled after preset for limiting level relative to modulated carrier envelope.
Calibrator	100-kHz increments.

c. Localization. The tests listed below will aid in isolating the trouble. First, localize the trouble to a single stage or circuit; then, isolate the trouble within that circuit by voltage, resistance, and continuity measurements.

(1) *Signal tracing.* Signal tracing (para 7-4) will help in isolating a trouble to a specific circuit at fault.

(2) *Voltage and resistance measurements.* This equipment is transistorized. Observe all cautions given to prevent transistor damage. Make voltage and resistance measurements in this equipment only as specified. When measuring voltages, use tape or sleeving to insulate the entire test prod, except for the extreme tip. A momentary short circuit can ruin the transistor. (For example, if the bias is shorted out, excessive current between the emitter and the base would ruin the transistor.) Use the resistor and capacitor color codes (fig. 6-20 and 6-21) to find the value of the components. Use the voltage and resistance charts to find normal readings, and compare them with the readings taken.

(3) *Troubleshooting chart.* The trouble symptoms listed in the chart (para 7-5*b*) will aid in localizing trouble to a component part.

(4) *Intermittent troubles.* In all these tests, the possibility of intermittent troubles

should not be overlooked. If present, this type of trouble often may be made to appear by tapping or jarring the equipment. Check the wiring and connections to the various assemblies and subassemblies of the HF receiver.

(5) *Signal substitution.* These procedures enable the repairman to quickly localize a trouble to a stage. An RF generator, audio oscillator, and oscilloscope are units of test equipment that are used in signal substitution procedures.

(6) *Cabling.* Check cabling for loose fittings on connectors between subassemblies. Check connectors for loose fittings between the coaxial braid and the connector body (the connector will rotate freely on the cable if a connection is broken). Check to see that cables are properly interconnected.

7-4. Signal Tracing

To trace the signal through the HF receiver, remove the dust cover; then connect the equipment as shown in figure 7-1.

a. Procedure. As an aid to signal tracing, refer to the functional block diagram (fig. 5-1) and subassembly block diagram (fig. 6-22). An understanding of the operation of the HF receiver and the signal path can be obtained from a thorough familiarization of the unit analysis in chapter 6. The signal can be traced down the signal path with a suitable oscilloscope. Another aid to localization is to make use of the agc voltages. *Always measure supply voltages and agc voltages before making any other investigations.* If the HF receiver is dead in one of the AGC switch FAST-MED-SLOW positions, switch to manual and adjust manual gain control A2R9. Always start the HF receiver properly (para 3-6). Controls in the wrong position can cause some of the symptoms called out in the trouble-shooting chart (para 7-5*b*). Unless otherwise indicated, the HF receiver controls should be as called out in the starting procedure.

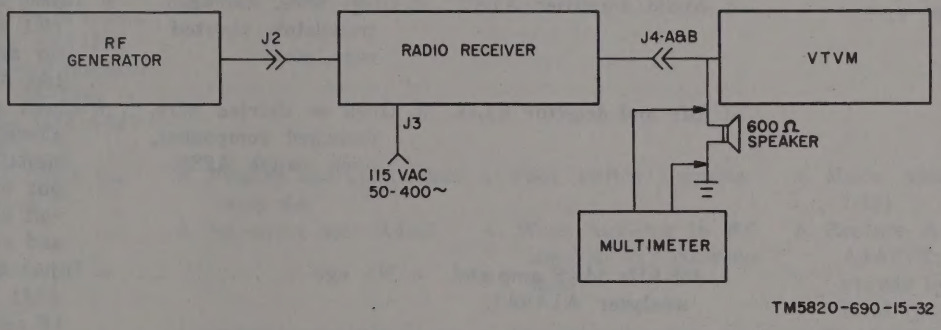

Figure 7-1. Standard test setup.

b. Signal Tracing Chart. Because of the low level of signals in the early stages of the HF receiver, signals are more helpful when injected at various key points than when placed at the antenna and measured through their paths. This injection may be done beginning at the 455-kHz 3d IF amplifier, moving back to the 2- to 3-MHz 2d IF amplifier, the 40-MHz 1st IF amplifier, and, finally, the antenna. The trouble is thereby localized to one of the major areas of the HF receiver by noting the step in which normal operation ceases. The chart below shows typically normal results when signals are injected into the points indicated. The signal is injected at the indicated levels and frequency and carefully tuned into the center of the receiver passband before signal-to-noise measurements are made.

HF receiver test conditions		*Signal generator*
Receiver PWR-ON sw:	ON	.... RF Generator 1 kHz
Detector function sw:	AM	modulation, 30% modulation.
SELECT sw:	6 kc	Level as indicated.
ANL control:	OFF	
AGC switch:	FAST	
CAL control:	OFF	
C.O.R. SENS control:	OFF	
KC TUNING control:	500	

RF generator freq	*Input*	*Subassembly*	*Approx signal required to give std output (10 db S+N/N)*
455 kHz	A5J1	455-kHz 3d IF and filters, A1A5 and A1A4	—60 dbm
2.5 MHz	A3A1E4	2- to 3-MHz 2d IF amp A3A1	—80 dbm
40 ± 0.5 MHz	A1A3J1	40-MHz 1st IF A1A3	—85 dbm
Antenna	A4J2	Preamplifier and band selector A4	—105 dbm

7-5. Troubleshooting Techniques

a. Instructions. Perform the checks and corrective measures indicated in the overall troubleshooting chart (*b* below).

b. Overall Troubleshooting Chart.

Item	*Symptom*	*Subassembly involved*	*Possible problem*	*Corrective action*
1	HF receiver dead; no output noise; no response when appropriate signal is injected at IF (40-MHz, 1st IF A1A3J1; or 2-3-MHz, 2d IF A3A1E4).	*a.* Power supply: A1A8, rect filter; A1A9, voltage regulator; A5A1, ac pwr line filter; A5F1, ac fuse; A1T1, pwr transformer; A1Q1 & Q2, pwr regulator transistors.	*a.* Defective: (1) Fuse A5F1. (2) Switch A2S1. (3) Diode A1A8. (4) Filters A5A1. (5) Regulator A1A9. (6) Transformer A1T1.	*a.* Check the following: (1) Power supply lines for short and open circuits. (2) Voltages; make appropriate replacement (para 8-16).
		b. Agc detector and amplifier A1A5A2	*b.* Short-circuited or damaged component in agc line or agc detector amplifier.	*b.* Check voltage and resistance on agc line and at agc switch A2S4.
		c. Audio amplifier A1A7.	*c.* Open wire, damaged transistor, shorted wire, etc.	*c.* Inject 1-kHz audio signal (0.1 volt rms) into center arm of volume control A2R3.
		d. Bfo and detector A1A6.	*d.* Open or shorted wire, damaged component, open switch A2S2.	*d.* Check audio amplifier (*c* above); insert 455-kHz signal into A1A6E1, input of detector at 0.25 volt and check both am. and cw detection.
		e. 455-kHz 3d IF amp and analyzer A1A5A1.	*e.* No agc	*e.* Inject 455-kHz signal into A5J1 at 500 uv. Check IF agc voltage.
2	Severe distortion in audio signal.	*a.* Audio amplifier A1A7.	*a.* One transistor of push-pull stage inoperative.	*a.* Replace transistor or transformer.
		b. Bfo and detector A1A6.	*b.* Improperly biased detector.	*b.* Trace to defective component (para 8-13).
		c. Agc detector and amplifier A1A5A2.	*c.* Improperly adjusted agc.	*c.* Refer to paragraph 8-22 of alignment procedure.
		d. 3d IF amplifier and analyzer A1A5A1.	*d.* Improper setting or biasing of diodes.	*d.* Adjust analyzer control A2R1; check diodes and bias circuits (para 8-12*b* (3)).
3	Normal operation in CW/SSB function but abnormal in AM. or vice versa, front panel (A2S2).	Bfo and detector A1A6.	*a.* Defective detector transistor.	*a.* Refer to test procedure (para 8-13)
			b. Defective selector switch A2S2.	*b.* Check switch and replace.
4	No zero beat when bfo freq control A2R7 is adjusted.	Bfo and detector A1A6.	Bfo misaligned	Refer to alignment procedure (para 8-13*b*).

Item	Symptom	Subassembly involved	Possible problem	Corrective action
5	Normal operation at manual (OFF) AGC switch position; equipment dead or operation distorted at FAST-MED-SLOW positions.	Agc det and amp A1A5A2.	*a.* Defective component or wiring.	*a.* Refer to test procedure (para 8-12).
			b. Open wire	*b.* Check interconnections.
			c. Analyzer clipping.	*c.* Check setting of anl control A2R1; check voltage.
			d. Defective component.	*d.* Signal-trace and replace defective component.
			e. Open IF selectivity filter of A1A4.	*e.* Check by switching to other bandwidths; replace switch assembly or defective filter.
6	Intermittent operation of MC tuning indicator.	Preamplifier and band selector assembly A4.	Bad alignment of switch contacts.	Clean switch contacts with alcchol and soft brush. Make appropriate mechanical adjustment.
7	Poor sensitivity at upper and/or lower extremes of all 1-MHz bands.	*a.* 1st mixer assembly A4A3,, A4S1E, and A4A3, A4S1E, and	*a.* Misalignment	*a.* Refer to alignment procedure (para 8-4).
		b. 40-MHz 1st IF and 2d mixer A1A3.	*b.* Misalignment	*b.* Refer to alignment procedure (para 8-5).
		c. RF amplifier module A4A2.	*c.* Misadjustment of A4C2.	*c.* Refer to alignment procedure (para 8-3).
8	Sensitivity low; signal distorted.	2d mixer A1A3A3	Misadjustment of A1A2A1R6.	Refer to paragraph 8-21 of receiver alignment procedure.
9	HF receiver dead; very low noise level at audio output and no response when 2 to 3 MHz is injected into A3A1E4, but normal response when 455 kHz is injected into A5J1 at 500 μv.	*a.* Vfo A3A2	*a.* Not oscillating	*a.* Check level and frequency.
		b. 2d IF amplifier and 3d mixer A3A1.	*b.* No gain-open circuit.	*b.* Refer to 2- to 3- MHz IF amp-3d mixer test procedure (para 8-10).
10	Low sensitivity for all bands.	*a.* Preamp and band select assy A4.	*a.* Poor switch contacts.	*a.* Make adjustment (para 7-19).
		b. 1st mixer assy A4A3.	*b.* Weak nuvistor in RF amp A4A2; excessive loss.	*b.* Replace A4A2V1 or A4A2V2; check for proper local oscillator level (para 7-9).
		c. 40-MHz 1st IF amp and 2d mixer A1A3.	*c.* Insufficient gain; misalignment.	*c.* Check IF amplifier for off frequency, mistuning, or poor mixer. Refer to alignment procedure (para 8-5).
		d. Agc	*d.* Improper adjustment.	*d.* Refer to receiver alignment procedure (para 8-22).
11	Low sensitivity on one or more limited bands.	*a.* Preamp and band selector switch A4S1A, B, C, D, E, F.	*a.* Mistuning	*a.* Refer to alignment procedure (para 8-3).
		b. Preamp and band selector A4 and switch A4S1A, B, C, D, E, F.	*b.* Open coil	*b.* Replace coil or rotor assy (para 7-9*e*).
12	Low sensitivity on all even or all odd bands.	Preamp and band selector A4.	*a.* Open switch contacts.	*a.* Readjust contacts.
			b. Wiring failure on switch.	*b.* Repair.

Item	*Symptom*	*Subassembly involved*	*Possible problem*	*Corrective action*
13	High spurious signal leads, one or more limited number of bands.	*a.* First local oscillator A4A4 and A4S1E and F.	Misalignment	*a.* Realign; see procedure (para 8-4).
14	High spurious level on all bands.	Spectrum generator A1A2A1, harmonic generator and mixer A1A2.	Misadjustment of A1A2A1R6.	Realign. Refer to receiver alignment procedure (para 8-21).
15	HF receiver not responsive to signal at indicated frequency. Noise level normal.	1st local oscillator A4A4 and A4S1E and F.	Tuned to wrong frequency.	Retune 1st local oscillator; refer to alignment procedure (para 8-4).
16	HF receiver not responsive to signal at indicated frequency; noise level subnormal; normal response when signal is injected into 2-3-MHz IF (A3A1E4).	*a.* Preamp and band sel., A4.	*a.* No gain	*a.* Perform the following: (1) Inject signal to 40-MHz IF and 2d mixer at A1A3J1 and check sensitivity. (See para 7-4*b*.) (2) Check nuvistors, coil contacts, and tuning (para 7-9).
		b. 1st local oscillator A4A4.	*b.* Not oscillating	*b.* Check voltages, coil contacts.
		c. 1st mixer assy A4A3.	*c.* Open circuit	*c.* Check conversion gain.
		d. 40-MHz 1st IF and 2d mixer A1A3.	*d.* Excessive loss; no gain.	*d.* Check 37.5 MHz local oscillator signal; check gain of amplifier.
		e. 37.5-MHz local oscillator amp A1A11.	*e.* Low gain, dead	*e.* Refer to test procedure (para 8-8).
		f. 1-MHz ref osc A1A10.	*f.* No output	*f.* Replace unit A1A10.
		g. Spectrum generator A1A2A1.	*g.* No or low output ...	*g.* Adjust A1A2A1R6 and/or refer to test procedure (para 8-7).
		h. Harmonic mixer driver A1A2A3.	*h.* No input. Open transformer, open filter.	*h.* Refer to driver assy test procedure (para 8-7). Repair or replace unit.
17	HF receiver not responsive to signal at indicated freq; noise level subnormal; normal response when signal injected into 40-MHz IF.	*a.* Preamp and band selector A4.	*a.* No gain	*a.* Check agc, coil contacts, nuvistors, and 110-vdc supply (para 7-10).
		b. 1st local oscillator A4A4.	*b.* Defective buffer amp A4A4A2 or A4A4A3.	*b.* Check local oscillator level, frequency of oscillation, coil contacts, and supply voltages (para 7-9).
		c. 1st mixer assembly, A4A3.	*c.* Open circuit	*c.* Check connections (para 7-9*b*).
18	Low frequency oscillation (motorboating).	*a.* Agc detector and amp A1A5A2.	*a.* Improper settings; open filter capacitors.	*a.* Refer to receiver alignment procedure (para 8-22). Replace.
		b. Audio amp A1A7	*b.* Open bypass capacitor.	*b.* Isolate by shunting bypass capacitor with good capacitor.
19	HF receiver out of calibration when checked with frequency counter.	Reference oscillator A1A10.	Improper adjustment of crystal oscillator.	Calibrate; refer to receiver calibration procedure (para 8-23).

Item	Symptom	Subassembly involved	Possible problem	Corrective action
20	100-kHz marker frequencies not appearing at 100-kHz-intervals.	*a.* Marker generator A1A1.	*a.* Defective ic or low 1-MHz input.	*a.* Replace unit.
		b. Vfo unit A3A2	*b.* Oscillator extremely off frequency.	*b.* Check vfo freq, and refer to test procedure (para 8-10).
21	Low audio volume ..	Audio amp A1A7	Low gain	Refer to audio amp test procedure (para 8-14).

Section II. SUBASSEMBLY TROUBLESHOOTING

7-6. General

a. Procedure. The purpose of the overall troubleshooting chart (para 7-5*b*) is to localize the problem to a particular assembly. After this, the repairman should refer to the pertinent test and alignment procedures, chapter 8, and processed to test the subassembly as described. If the unit is found defective, refer to the appropriate schematic diagram and signal-trace. The voltage and resistance charts in this chapter will also be an aid to troubleshooting. The exception is the preamplifier and band selector assembly. Here, the unique operation and complexity of the unit require a special procedure (para 7-7 through 7-10). The chart in *b* below gives a tabulation of the performance characteristics of each subassembly as another aid in troubleshooting.

b. Performance Characteristics for Subassemblies of Receiver, Radio R-1421A/URR and R-1421B/URR.

				Dc power		Input				Output			
Subassembly	Gain	3-db bandwidth	Function	Voltage	Current	Cable design	Level	Nominal impedance	Frequency	Cable	Level	Nominal impedance	Frequency
A4 Pre-amplifier and band selector.	18-30 db	300 kHz-1 MHz	Determines band	110 vdc 6.3 vac +22.5 vdc	10 ma 300 ma 25 ma	J2 antenna jack	Noise 0 dbm	50Ω	1.0-31.0 MHz	A4J1 1st mixer output	Noise −10 dbm	50Ω	39.5 to 40.5 MHz
						Agc A4FL1	0 to −5 volts	High	Dc	A4J3 1st L.O. output	+7 to +12 dbm	50Ω	41.5 to 70.5 MHz
A1A3 1st IF and 2d mixer.	0 to 6 db	1.25 MHz	Image rejection	+22.5 vdc	10 ma	A1A3J1 IF signal input	Noise to −10 dbm	50Ω	39.5-40.5 MHz	A1A3J2 2- to 3-MHz output filter	Noise to −5 dbm	50Ω	2 to 3 MHz
										A1A3E3 L.O. in to 2d mixer	0 to +4 dbm	50Ω	37.5 MHz
A1A11 37.5- MHz L.O. amp.	70 db	300 kHz	Generates 2d L.O. from spectrum	+22.5 vdc −20 vdc	35 ma 100	A1A11 MHz input	−75 dbm	50Ω	37.5 MHz	A1A11E3 output sig.	0 dbm	50Ω	37.5 MHz
										A1A11E5 agc to spectrum generator	0 to 8 ma (current)	High	Dc
A1A2 harmonic gen. & mixer			Generation of synthesized 37.5 MHz L.O.	+22.5 at 1A1A2FL2 −20 at 1A1A2FL1		A1A2E1 A1A2E3 A1A2J1		50Ω 5kΩ	Dc 1 MHz 41.5 70.5 MHz	A1A2E9	0 dbm	50Ω	37.5 MHz
A1A10 1-MHz reference oscillator			Frequency standard	+22.5 vdc	25 ma					A1A10E10 output to marker gen.	2 volts rms	500Ω	1 MHz
										A1A10E11 output to spectrum gen.	2 volts rms	500Ω	1 MHz

Subassembly	Gain	3-db bandwidth	Function	Dc power		Input				Output			
				Voltage	Current	Cable design	Level	Nominal impedance	Frequency	Cable	Level	Nominal impedance	Frequency
A1A1 100-kHz marker gen.			Calibration markers	+22.5 vdc −20 vdc	2.5 ma 1.5 ma	A1A1E2 1-MHz input	1 volt rms	5kΩ	1 MHz	A1A1E1 100-kHz out	5 volts pp	4kΩ	100 kHz
A3A1 2d IF amp and 3d mixer	10 db	200 kHz	3d IF image rejection	−20 vdc	25 ma	A3A1E4 2- to 3-MHz input	Noise to −10 dbm	50Ω	2 to 3 MHz	A3A1E2 IF out. to rear deck 1A5A2	Noise to 0 dbm	50Ω	455 kHz
						A3A1E3 to input	0 dbm	50Ω	2.455 to 3.455 MHz	IF out. to filters A3A1E1 to A1A4E1	Noise to 0 dbm	50kΩ	455 kHz
Vfo unit A3A2			3d L.O.	−20 vdc	15 ma					A3A2J1 L.O. output	50Ω	0 dbm	2.455 to 3.455 MHz
Filters A1A4 IF	−5 to −20 db	500 Hz selectable 1.5 kHz 3.1 kHz 6.0 kHz 12.0 kHz	Determines selectivity			A1A4-B7 input	Noise to 0 dbm	50k	455 kHz	A1A4A1E7 output to A1A5E10	Noise to −5 dbm	50k	455 kHz
A1A5A1 3d IF amp and analyzer	100 db	100 kHz	Gain	−20 vdc	40 ma	A1A5E10 input	Noise to −5 dbm	220Ω	455 kHz	A1A5A1E3 output to agc amp.	Noise to +5 dbm	50Ω	455 kHz
						A1A5A1E8 agc	−10 to 0 volt	High	Dc				
						A1A5E13 analyzer	+10 to −5 vdc	1k	Dc	A1A5E11 output to detectors	Noise to +5 dbm	220Ω	455 kHz

				Dc power		Input				Output			
Subassembly	Gain	3-db bandwidth	Function	Voltage	Current	Cable design	Level	Nominal impedance	Frequency	Cable	Level	Nominal impedance	Frequency
A1A5A2 agc det amp	40 db		Agc detector dc amp.	−20 vdc +22.5 volt		A1A5A2E6 RF input	0 dbm	High	455 kHz	A1A5E3 IF agc out.	−10 to 0 vdc	220Ω	Dc
							−10 to 0 volt	High	Dc	A1A5E6 RF agc out.	−5 to 0 vdc	High	Dc
							0 to −0.5 vdc	High	Dc	A1A5E1 amp gain control		Low	Dc
						A1A5E5 agc gain feedback	0 to −5 vdc	High	Dc	A1A5E2 agc gain	−5 to 0 vdc	High	Dc
A1A6 Bfo & detector			Demodulation	−20 vdc	15 ma	A1A6E1 IF in.	0 dbm	High	455 kHz	A1A6E4 prod. det.		High	Audio
						A1A6E6 bfo tune	−9.5 to −13.5 vdc	High	Dc	A1A6E2 am. det.		High	Audio
A1A7 audio amp	25 db	20 kHz		+22.5 vdc	100 ma	A1A7E9 aud. input		High	Audio	A1A7E2 to A5J4-E A1A7E5 to A5J4-D	250 MW	600Ω	Audio

7-7. Preamplifier and Band Selector Assembly A4, Troubleshooting

(fig. 6-3 through 6-7, 6-9, 6-10, 7-7 and 7-8)

Having isolated HF receiver failure to unit A4, use the following guide as a further identification of the problem. The technician should bear in mind the three basic functions of the unit. They are preselection of two tuned circuits switch A4S1A, B, C, D; preamplification of cascode RF amplifier module A4A2; conversion of 1st local oscillator module A4A4 and 1st mixer assembly A4A3.

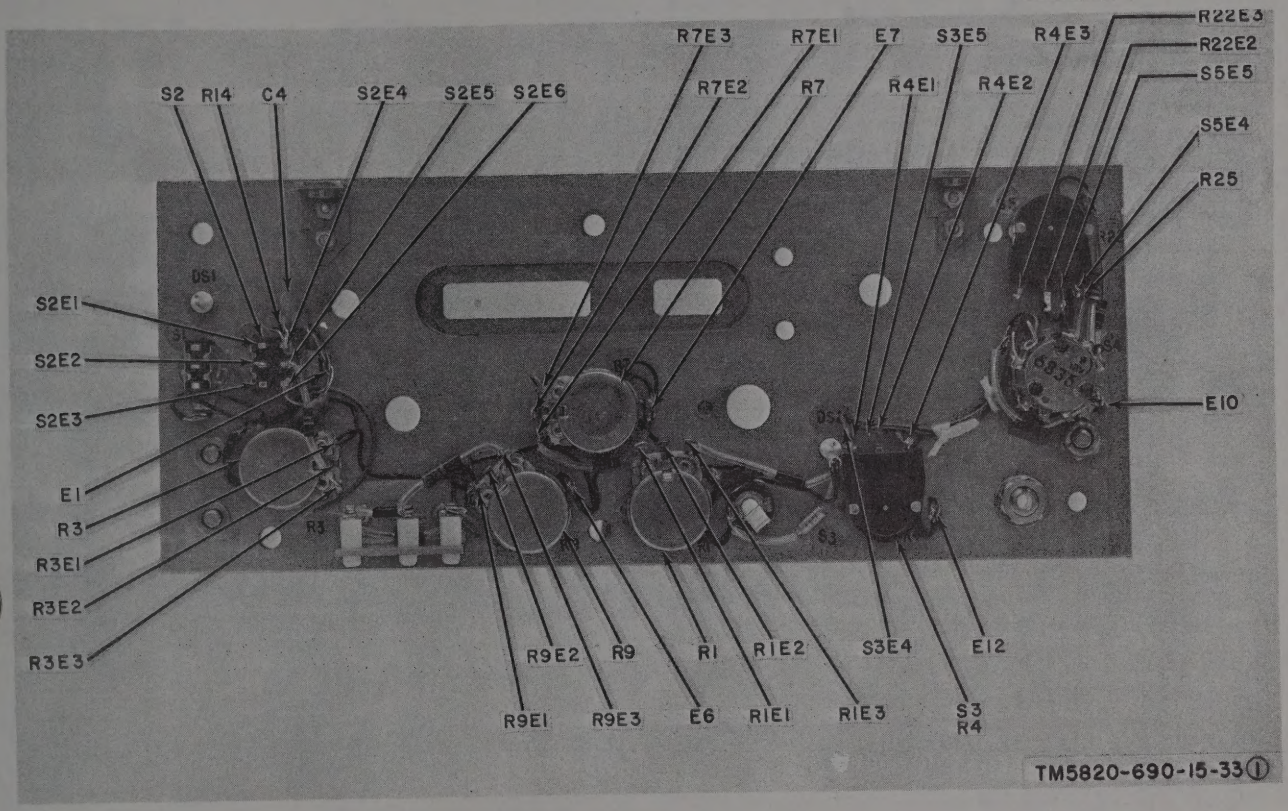

Figure 7-2. (1). Receiver, Radio R-1421A/URR back of front panel (sheet 1 of 2).

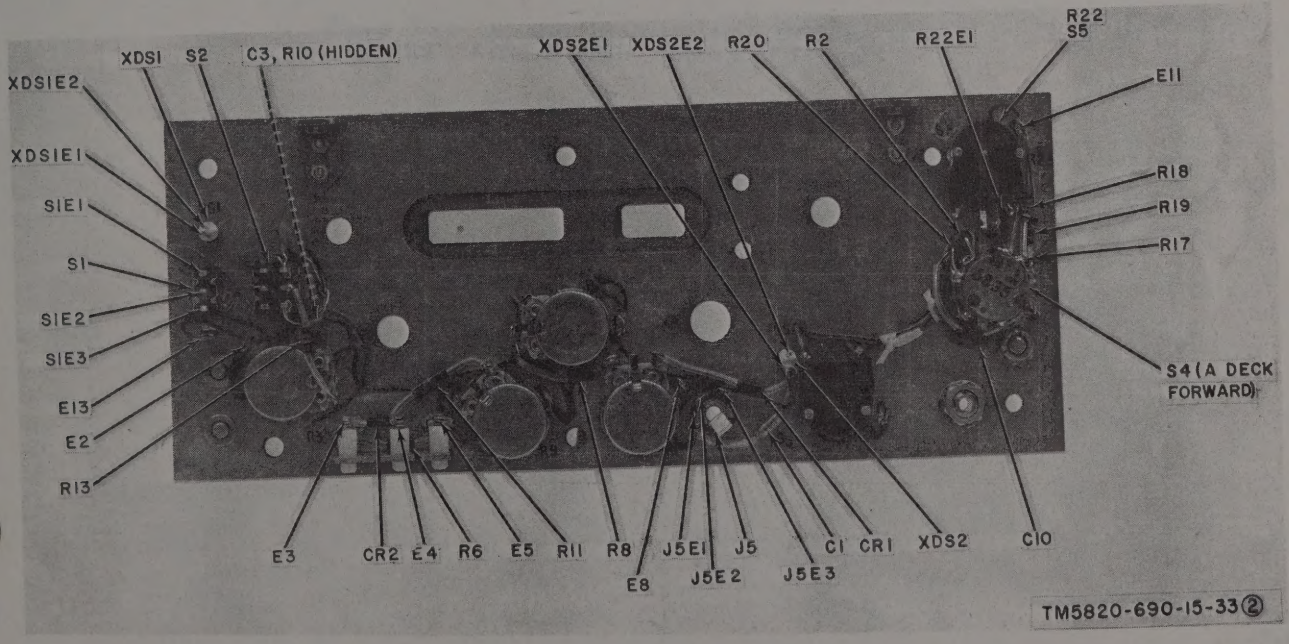

Figure 7-2 (2). Receiver, Radio R-1421A/URR, back of front panel, (sheet 2 of 2).

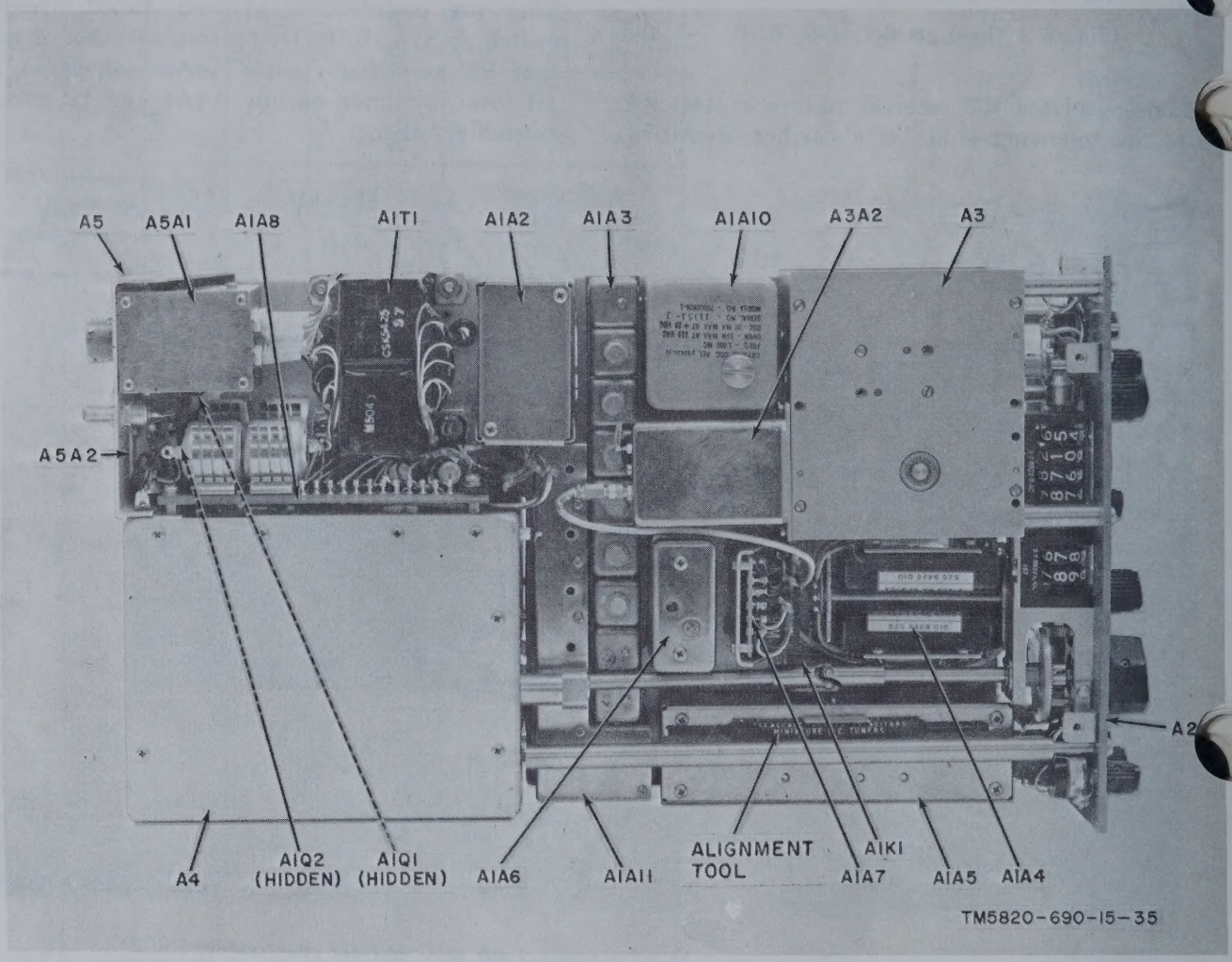

Figure 7-3. Receiver, Radio R-1421A/URR, top view.

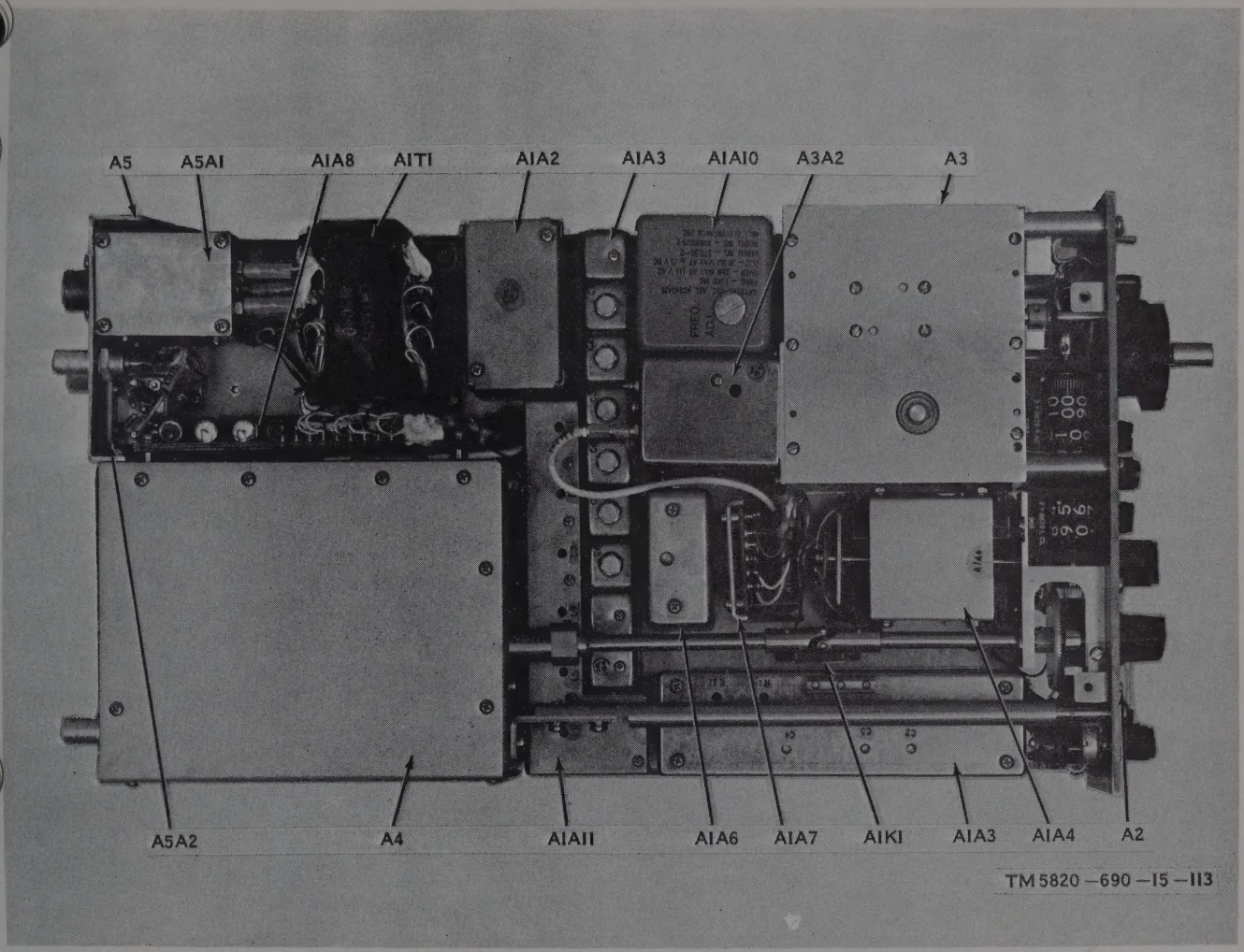

Figure 7-3.1. *Receiver, Radio R-1421B/URR top view.*

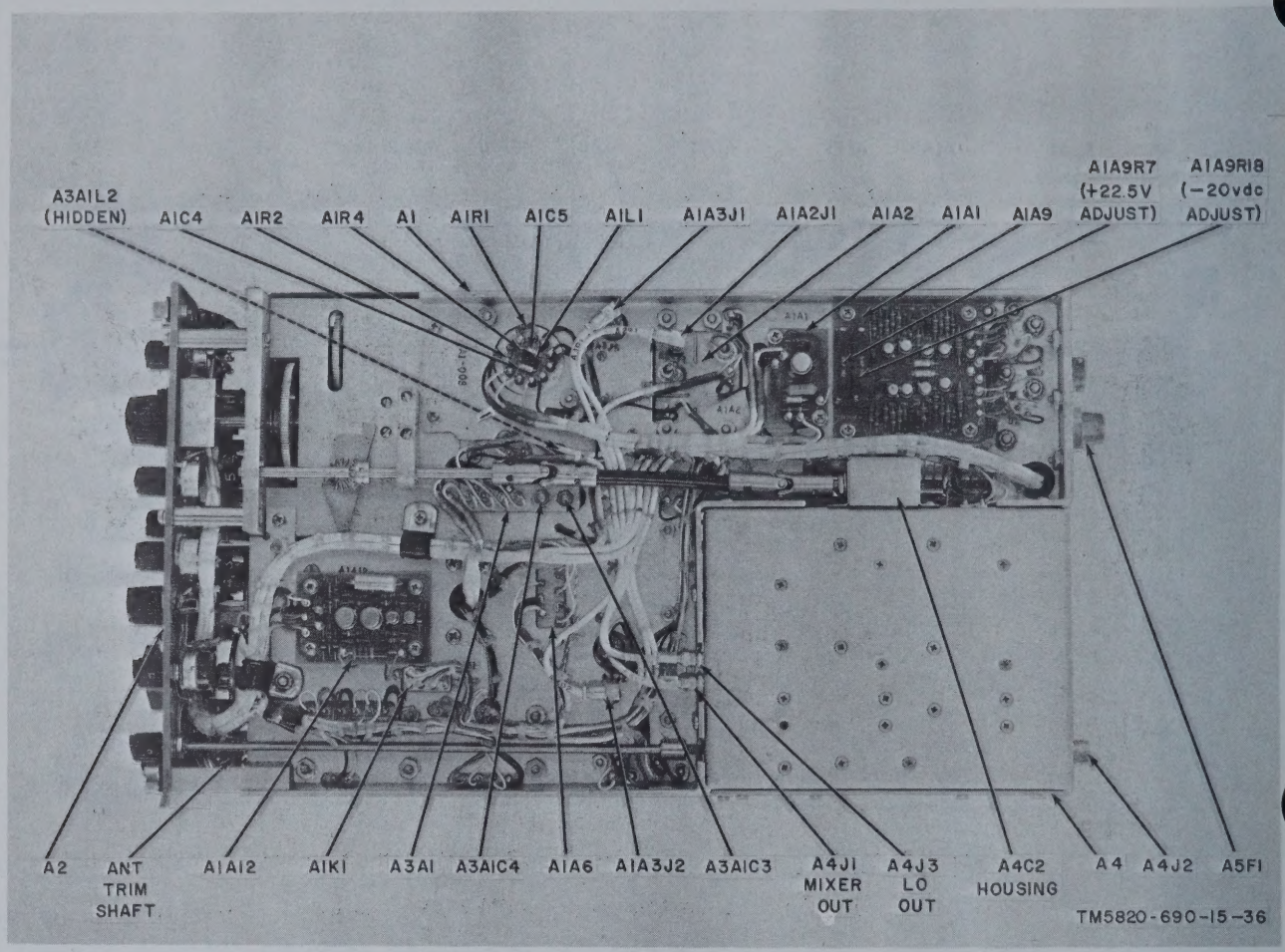

Figure 7-4. Receiver, Radio R-1421A/URR bottom view (wired).

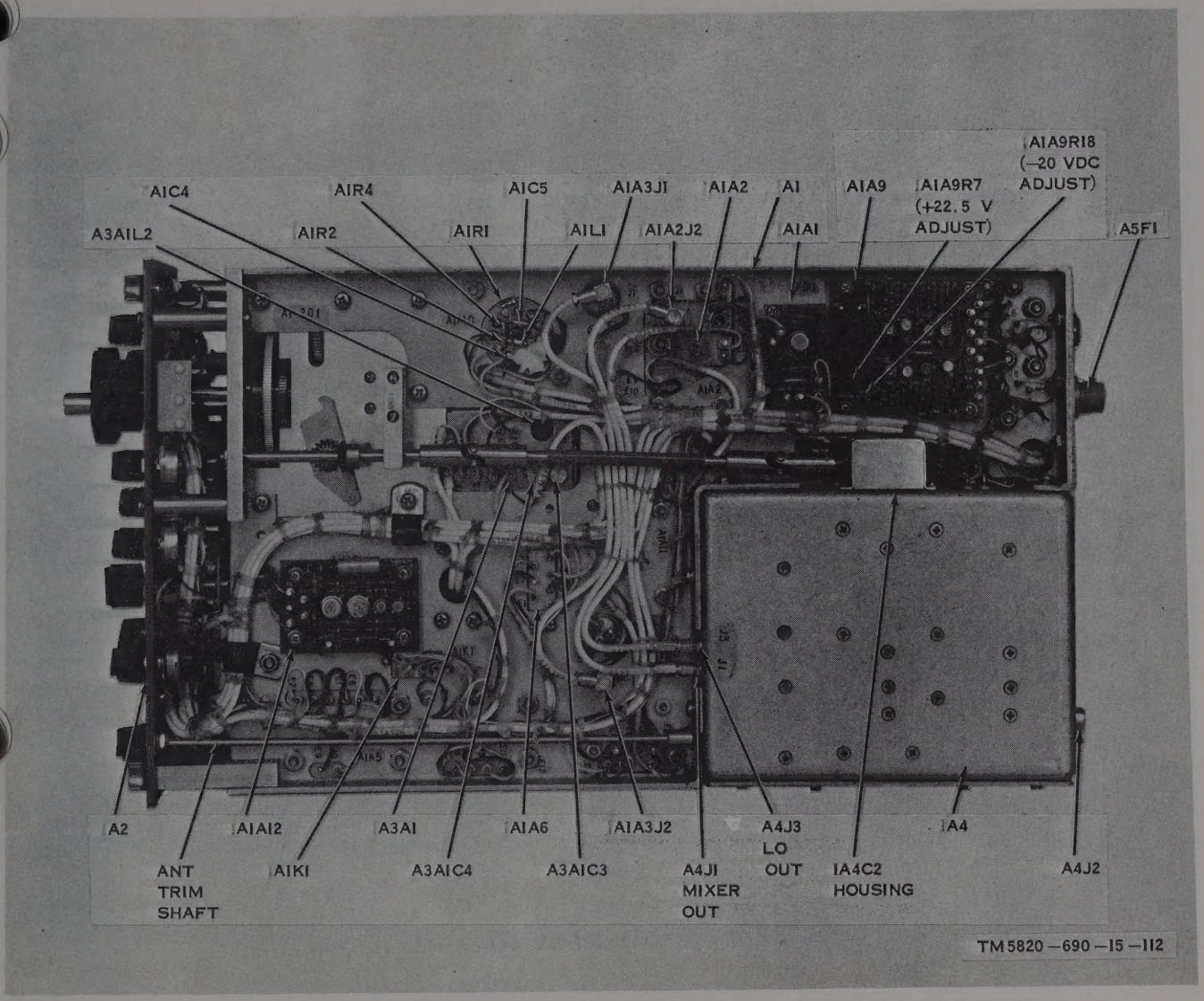

Figure 7-4.1. *Receiver Radio R-1421B/URR, bottom view.*

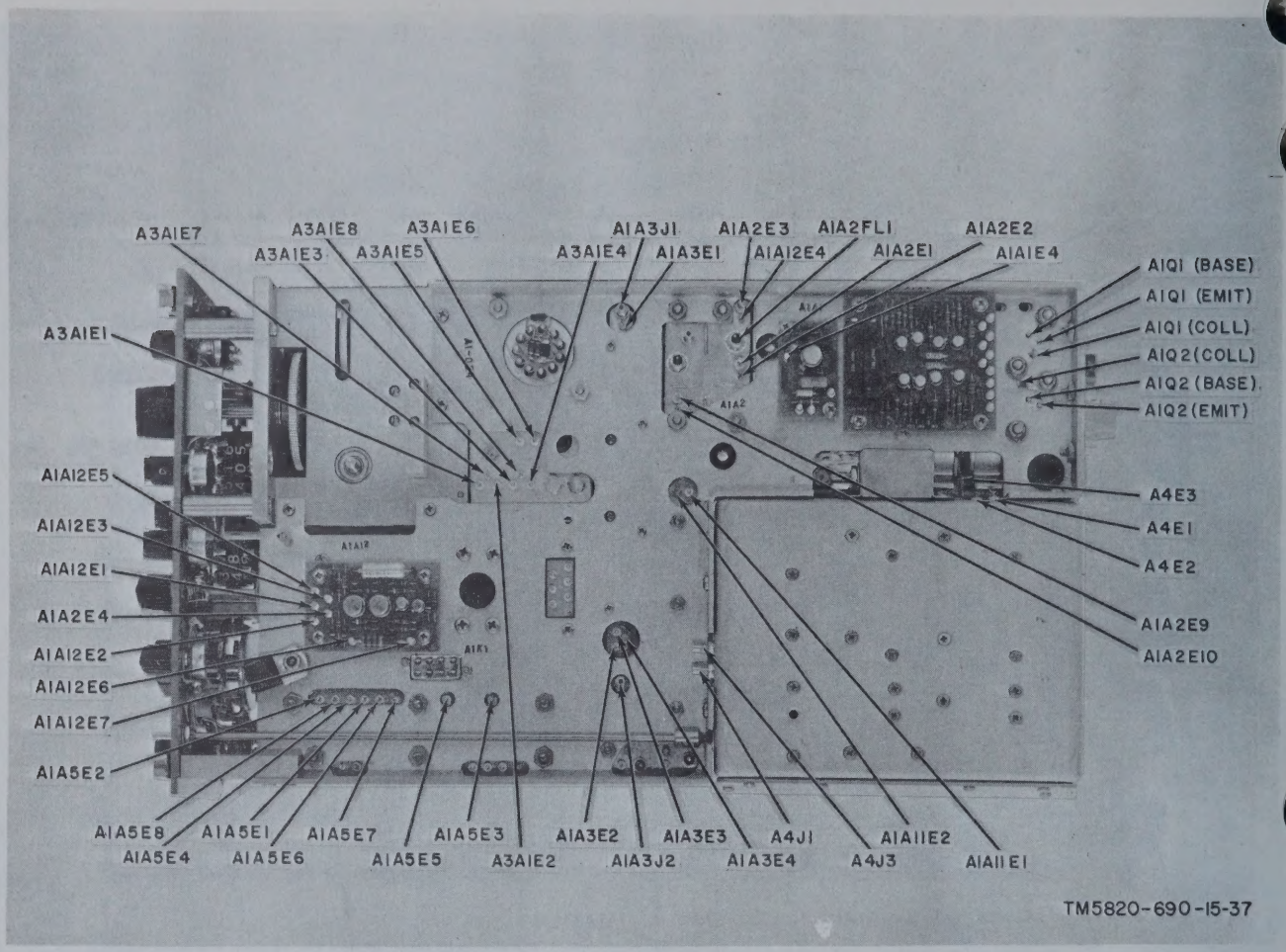

Figure 7-5. Receiver, Radio R-1421A/URR, bottom view (without wires).

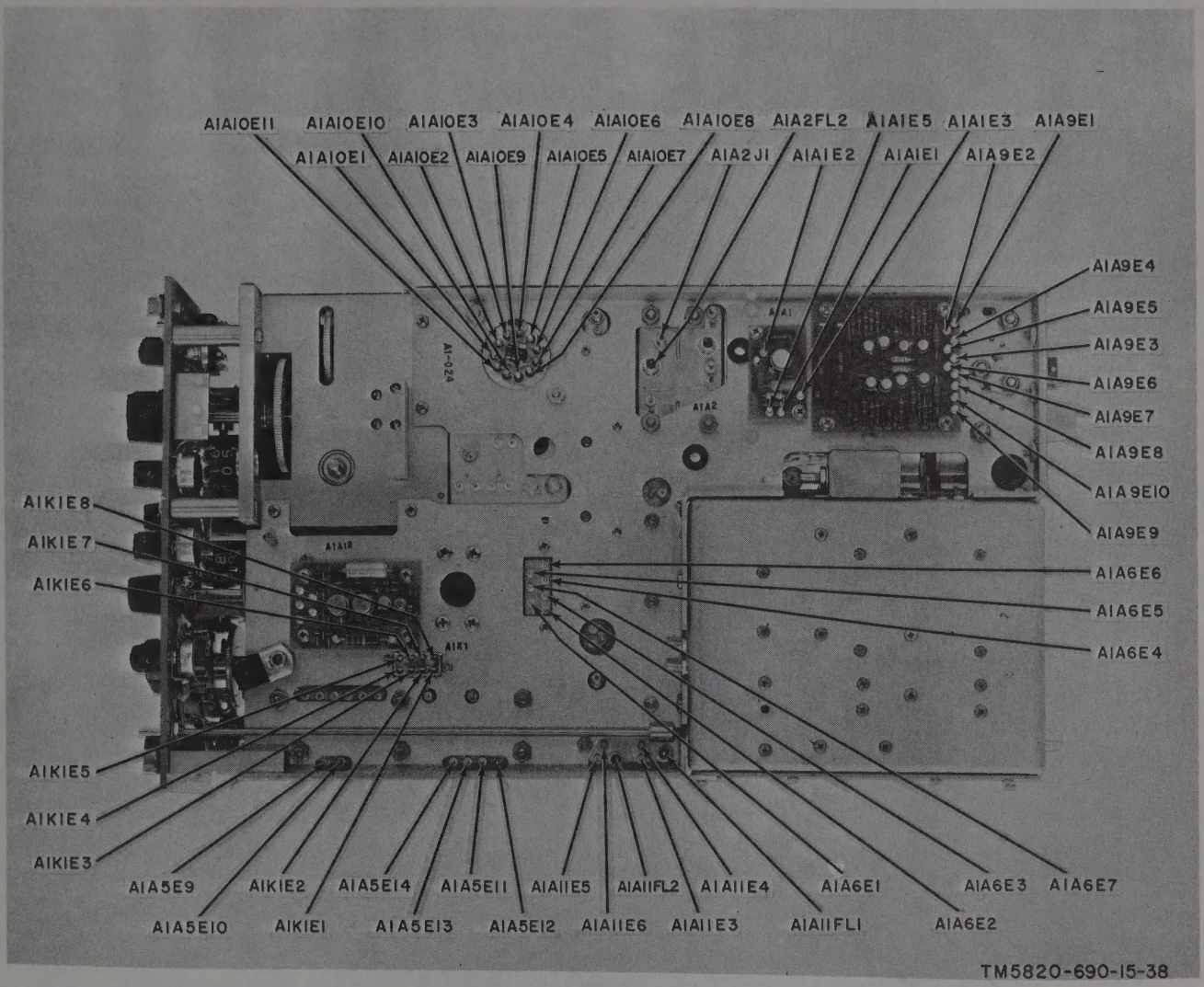

Figure 7-6. Receiver, Radio R-1421A/URR, bottom view (test points).

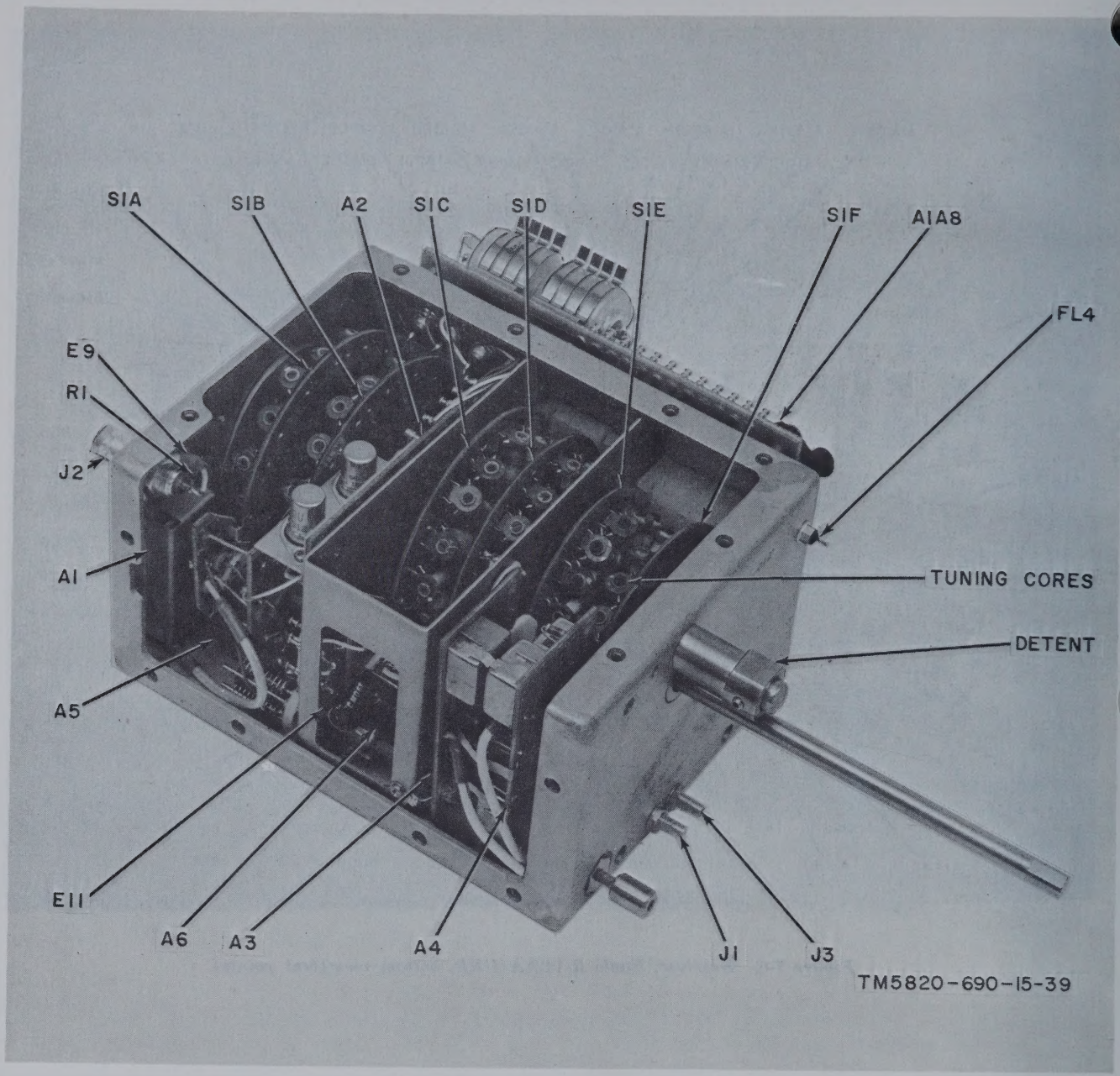

Figure 7-7. Preamplifier and band selector assembly A4, showing tuning cores.

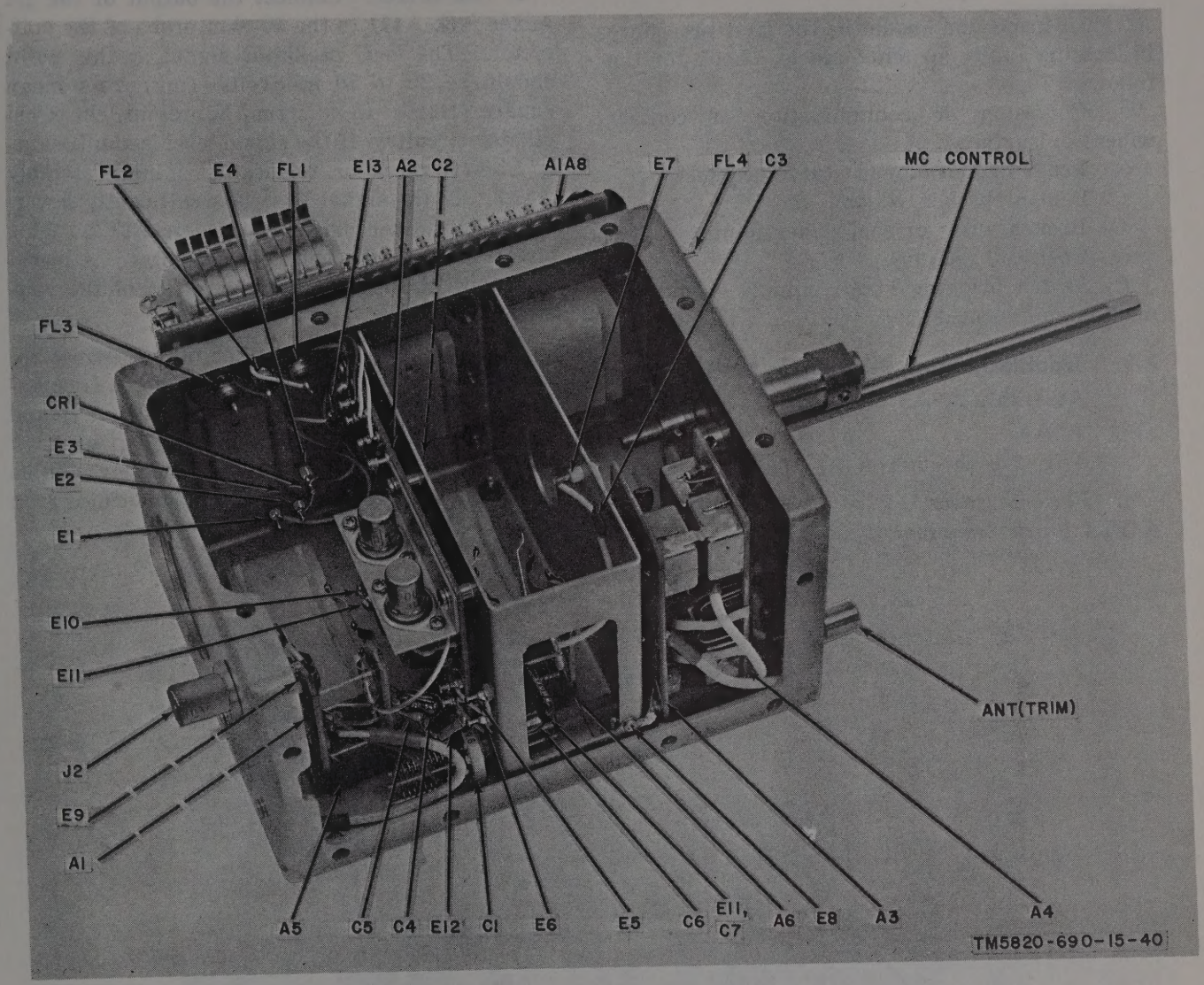

Figure 7-8. Preamplifier and band selector assembly A4.

7-8. Visual Inspection

A visual inspection should be the first procedure in locating faulty switch contacts. Look for the following:

a. Corrosion or contamination of contact wipers or surfaces.

b. Loose or misaligned stator sections.

c. Bent or broken wipers.

d. Broken wires or cold solder joints.

e. Open coil sections.

f. Switch bridging (two contacts should not make simultaneously).

7-9. Troubleshooting Procedures for 1st Mixer Assembly A4A3 and 1st L.O. Module A4A4

(fig. 7-9 through 7-18)

a. Power. Check +22.5-volt lead from filter A4FL4 to oscillator board A4A4W7.

b. 1st Mixer. Connect the output of the 1st mixer jack A4J1 to the 50-ohm probe of the voltmeter. The local oscillator signal at this point should be 20 to 70 millivolts (mv) root mean square (rms). If no signal is present, check oscillator circuitry. If the signal level is significantly higher, check or replace 1st mixer assembly A4A3. If the signal level is significantly lower, check 1st mixer driver module A4A3R2. This level should be 0.7 volt into the mixer as measured with the high impedance probe of the voltmeter.

c. Frequency. Connect the output of oscillator jack A4J3 to the 50-ohm input of the frequency counter. The frequency at each band should be within ±75 kHz of the nominal given in *h* below. If readings are approximately double these frequencies, check for contact bridging on switch A4S1-EF.

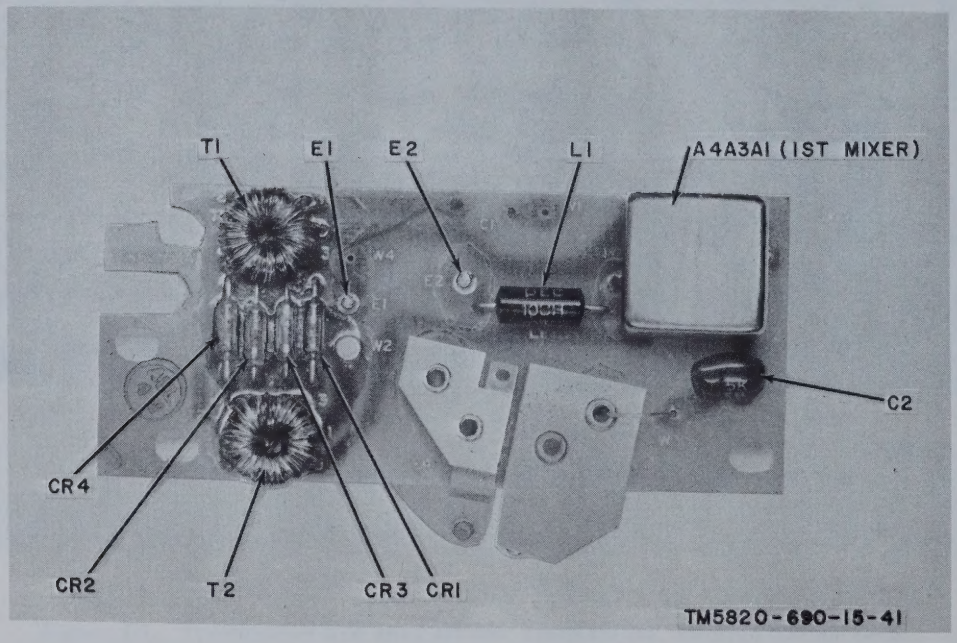

Figure 7-9. 1st mixer assembly A4A3.

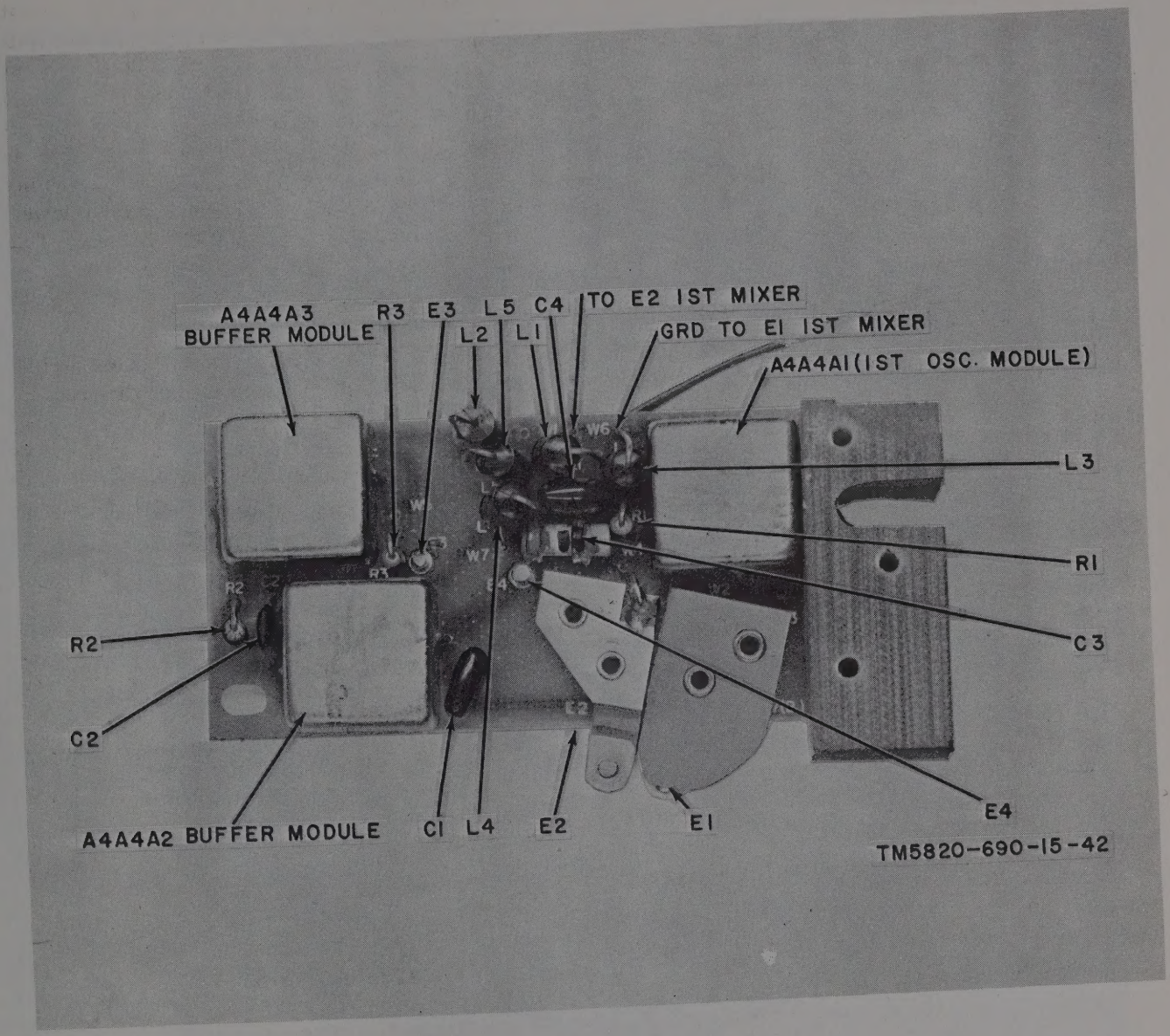

Figure 7-10. *1st oscillator module A4A4A1.*

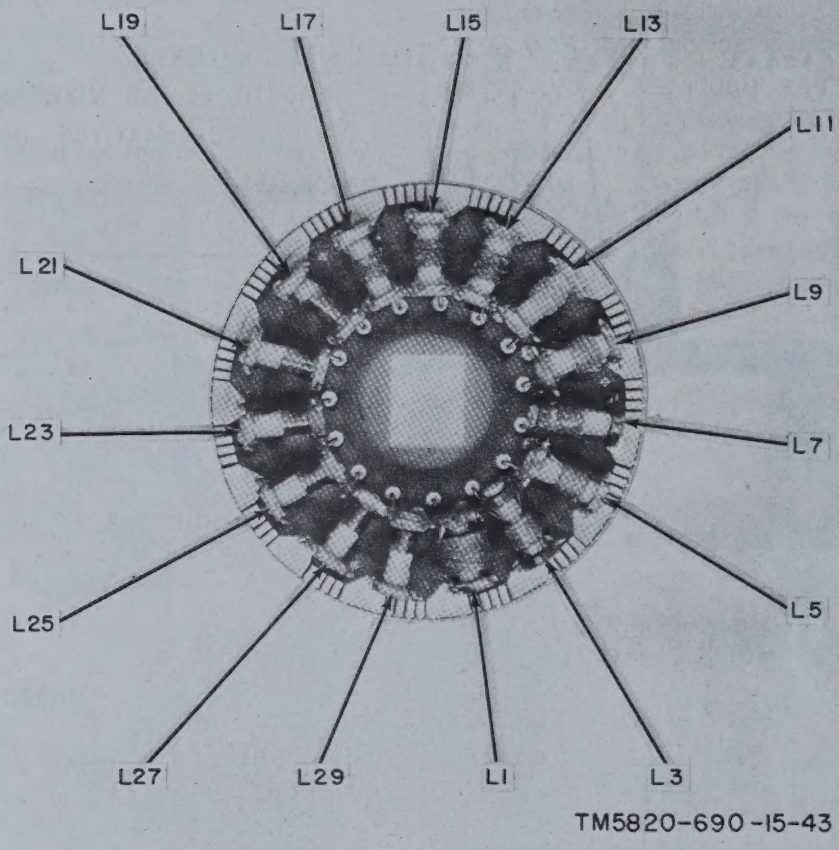

Figure 7-11. *Odd band RF input coils on rotor (deck* **A**).

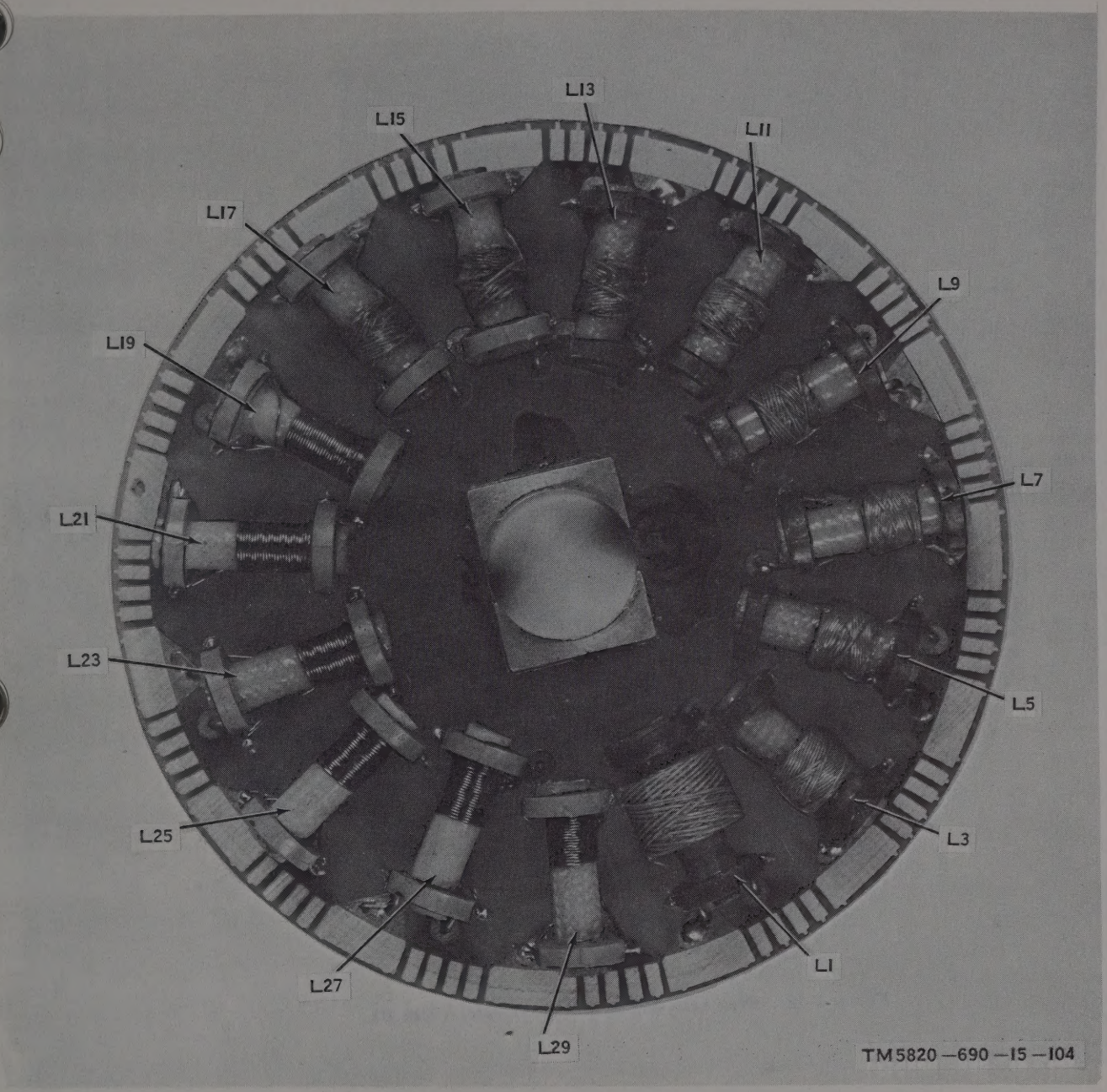

Figure 7-11.1. *Odd band RF input coils on rotor (deck A)* (*R*-1421*B*/*URR*).

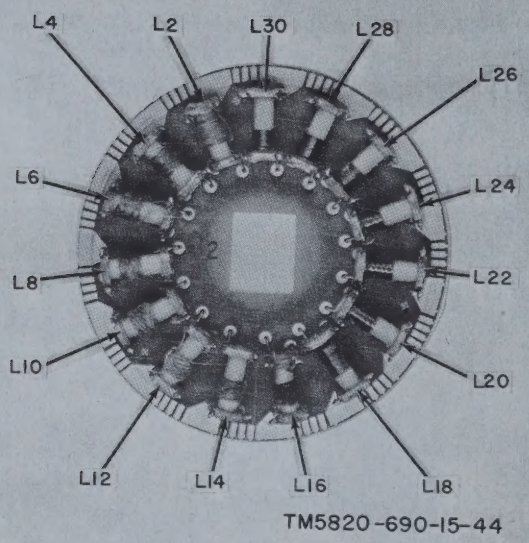

Figure 7-12. Even band RF input coils on rotor (deck B).

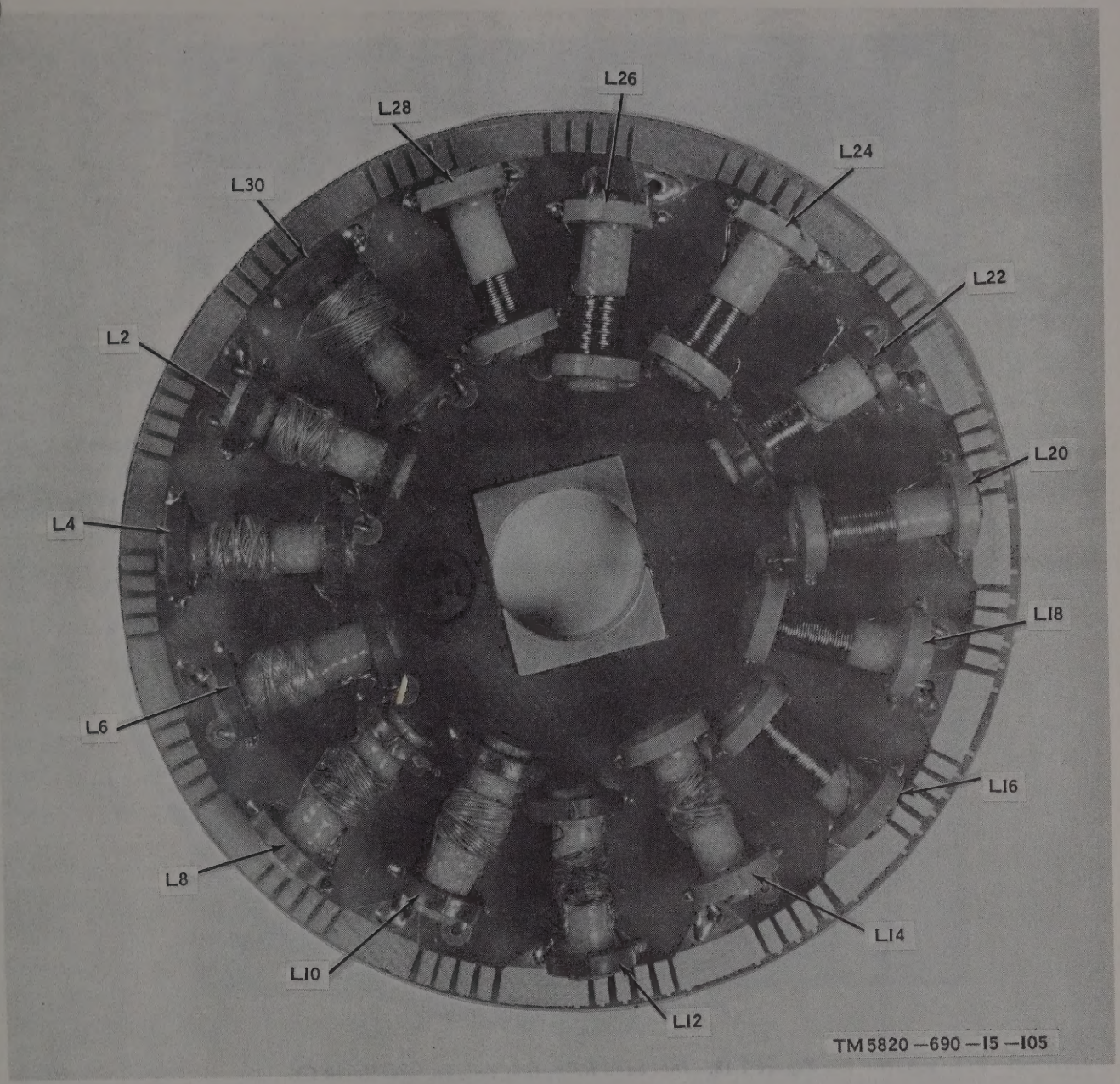

7-12.1. *Even band RF input coils on rotor (deck B) (R-1421B/URR).*

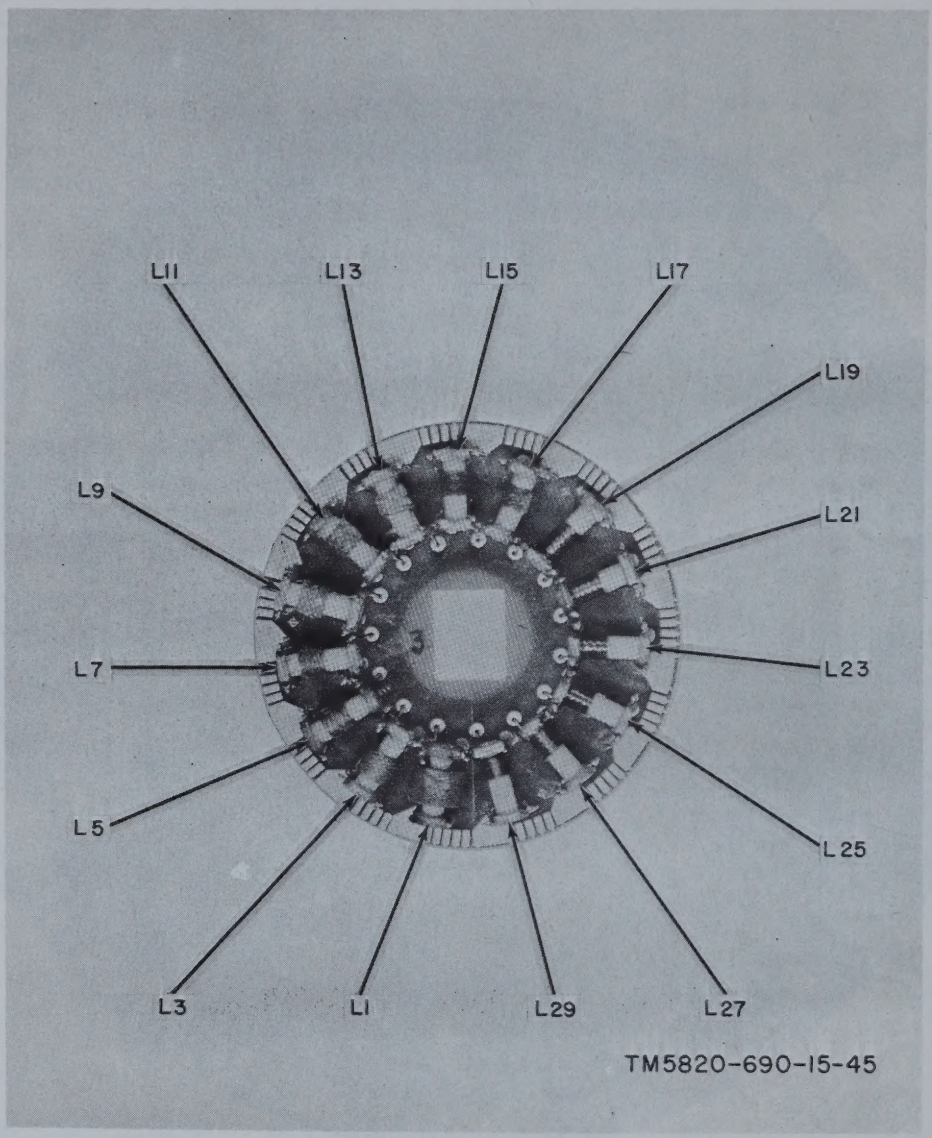

Figure 7-13. Odd band RF output coils on rotor (deck C).

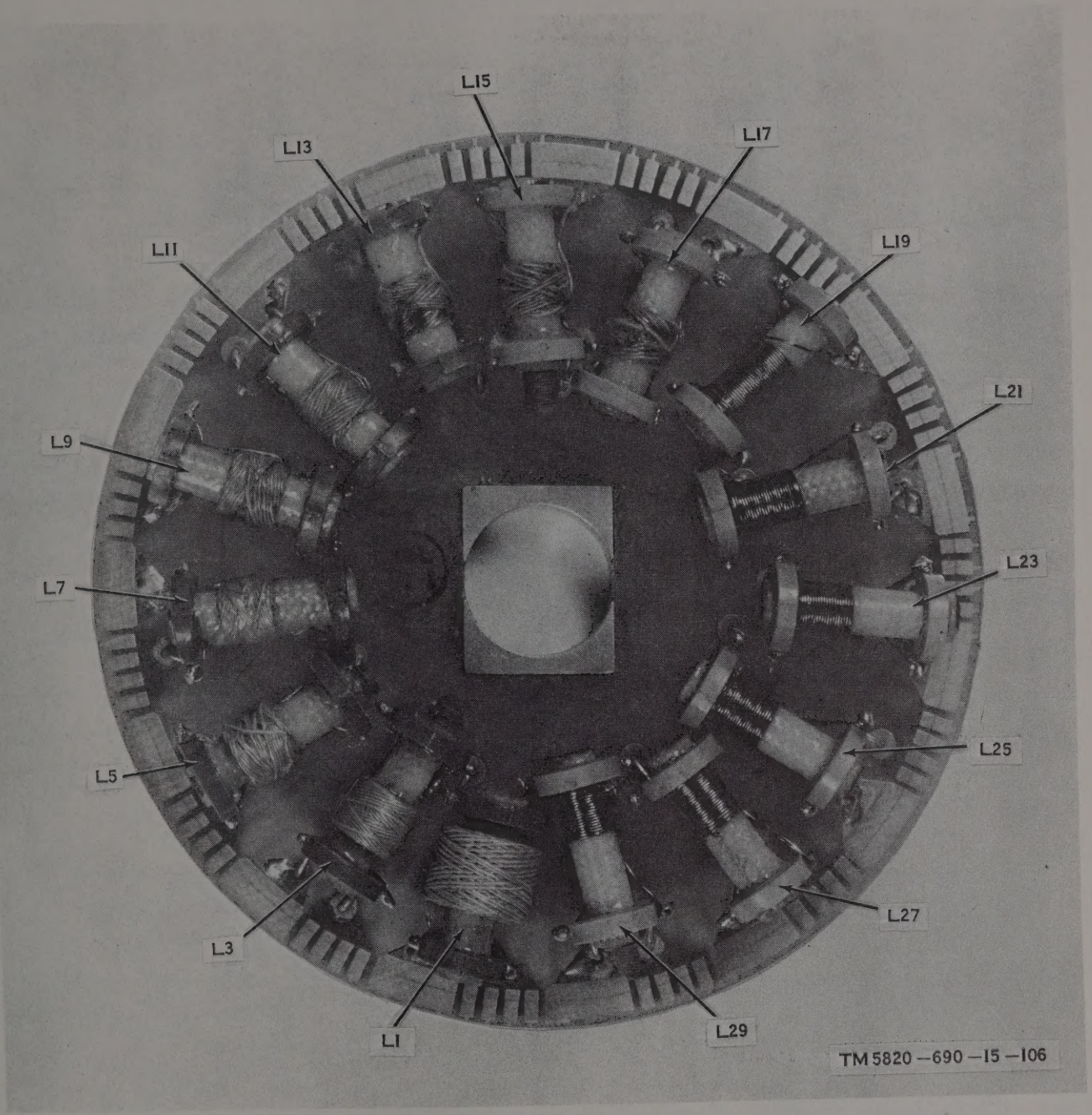

Figure 7-13.1. *Odd band RF output coils on rotor (deck C) R-1421B/URR.*

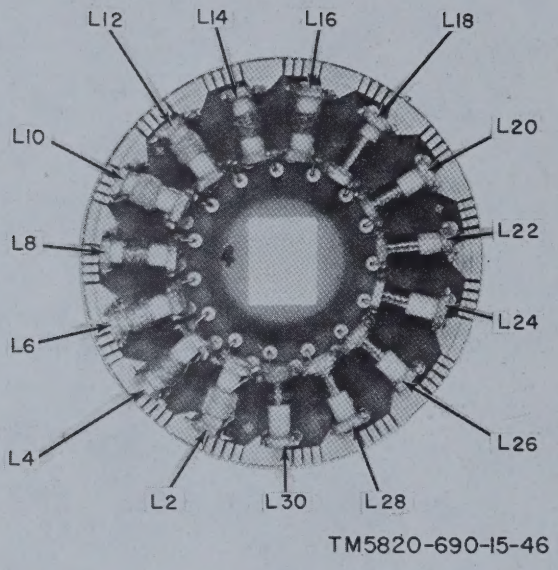

Figure 7-14. *Even band RF output coils on rotor* (*deck D*).

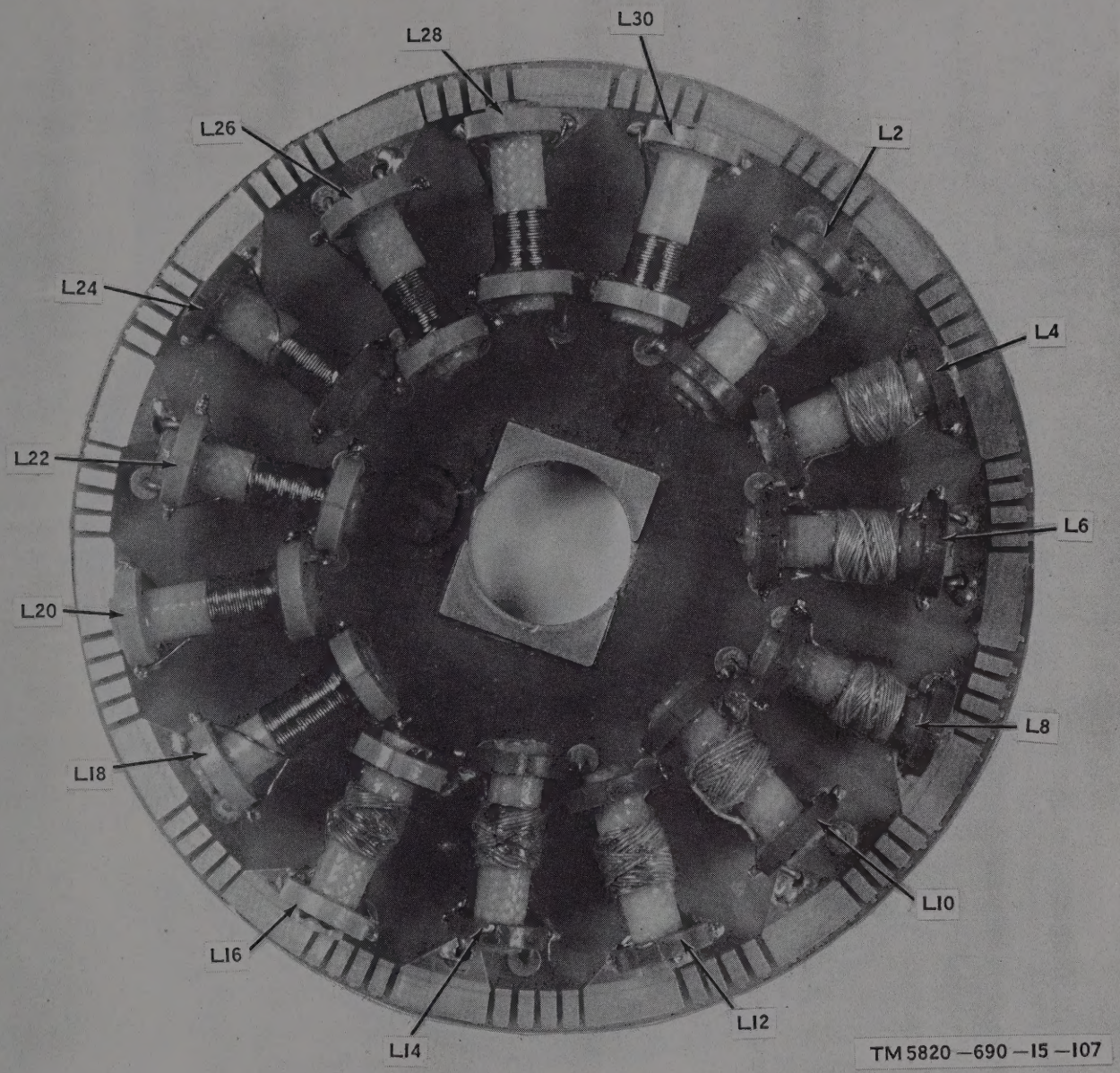

Figure 7-14.1. Even band RF output coils on rotor (deck D) (R-1421B/URR).

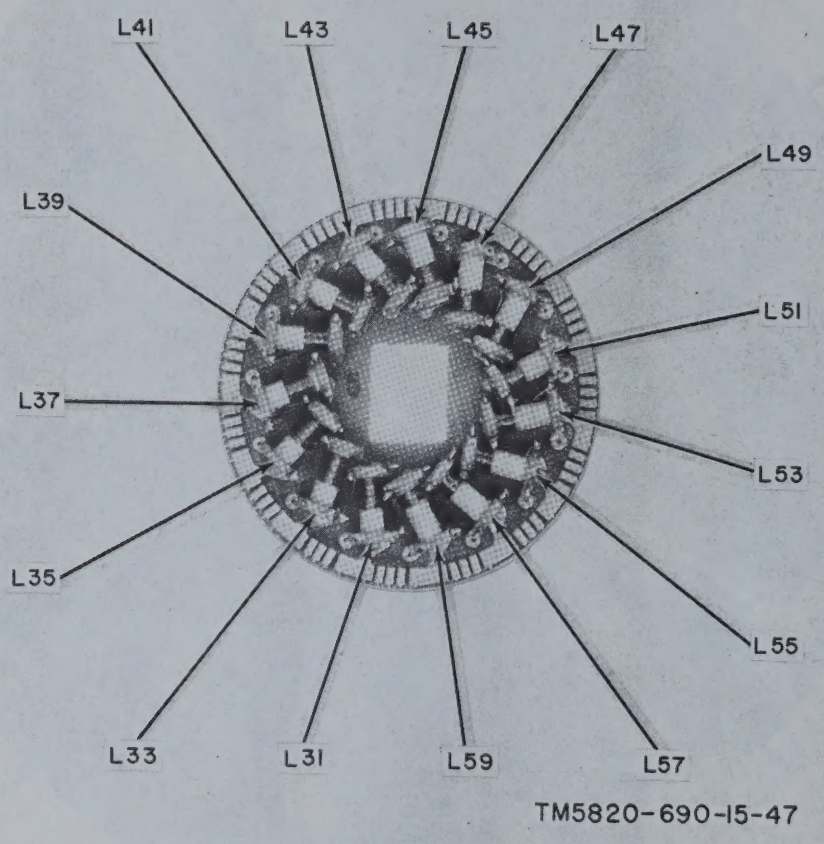

Figure 7-15. Even band RF 1st local oscillator coils on rotor (deck E).

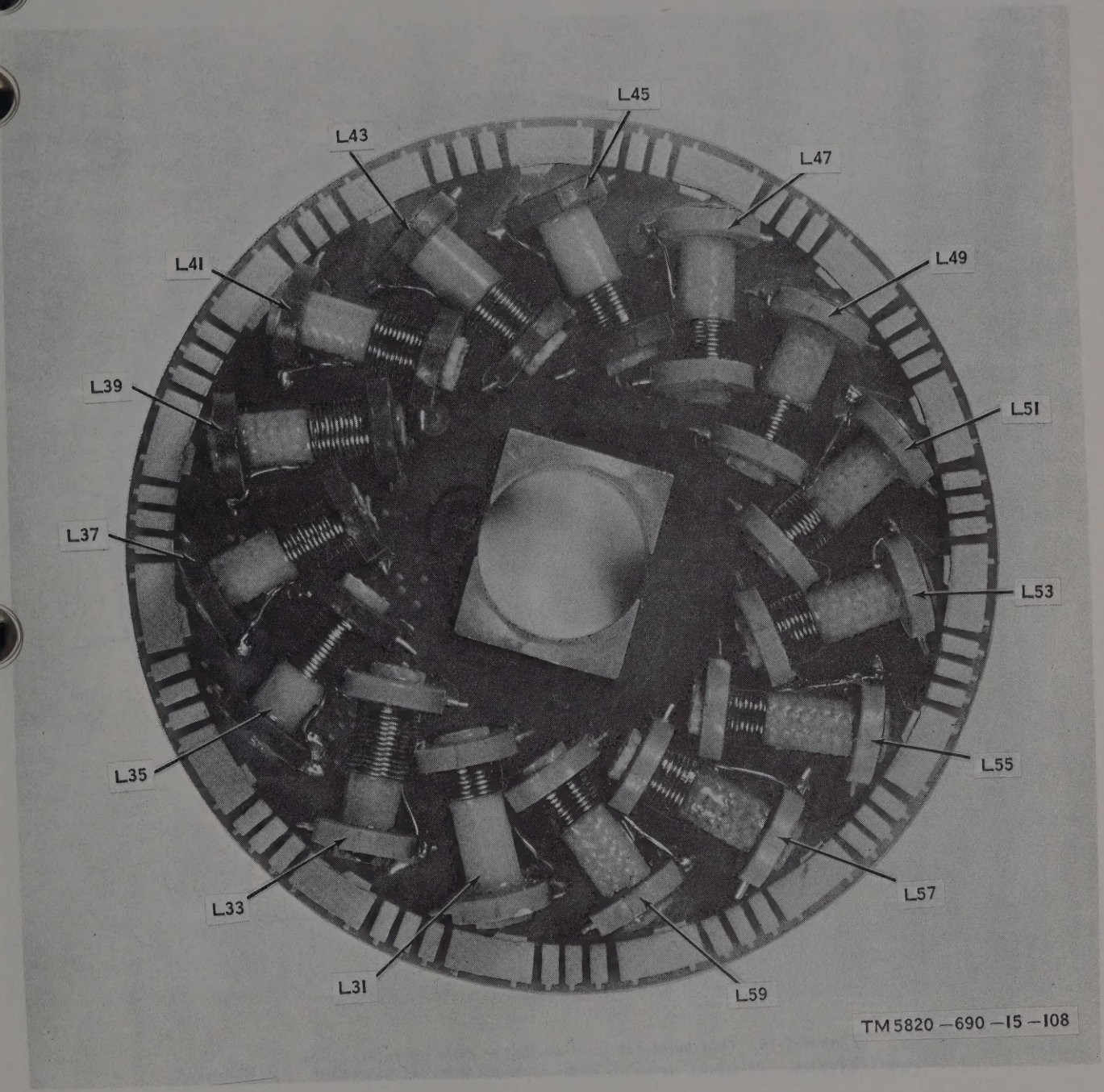

Figure 7-15.1. *Even band RF 1st local oscillator coils on rotor (deck E) (R-1421B/URR).*

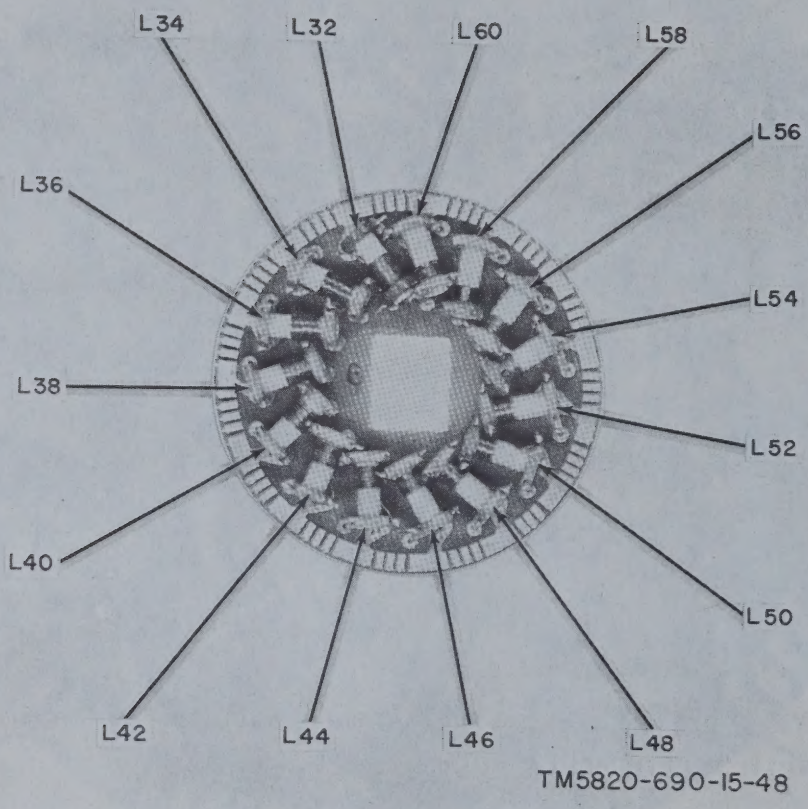

Figure 7-16. *Odd band* 1*st local oscillator coils on rotor (deck F).*

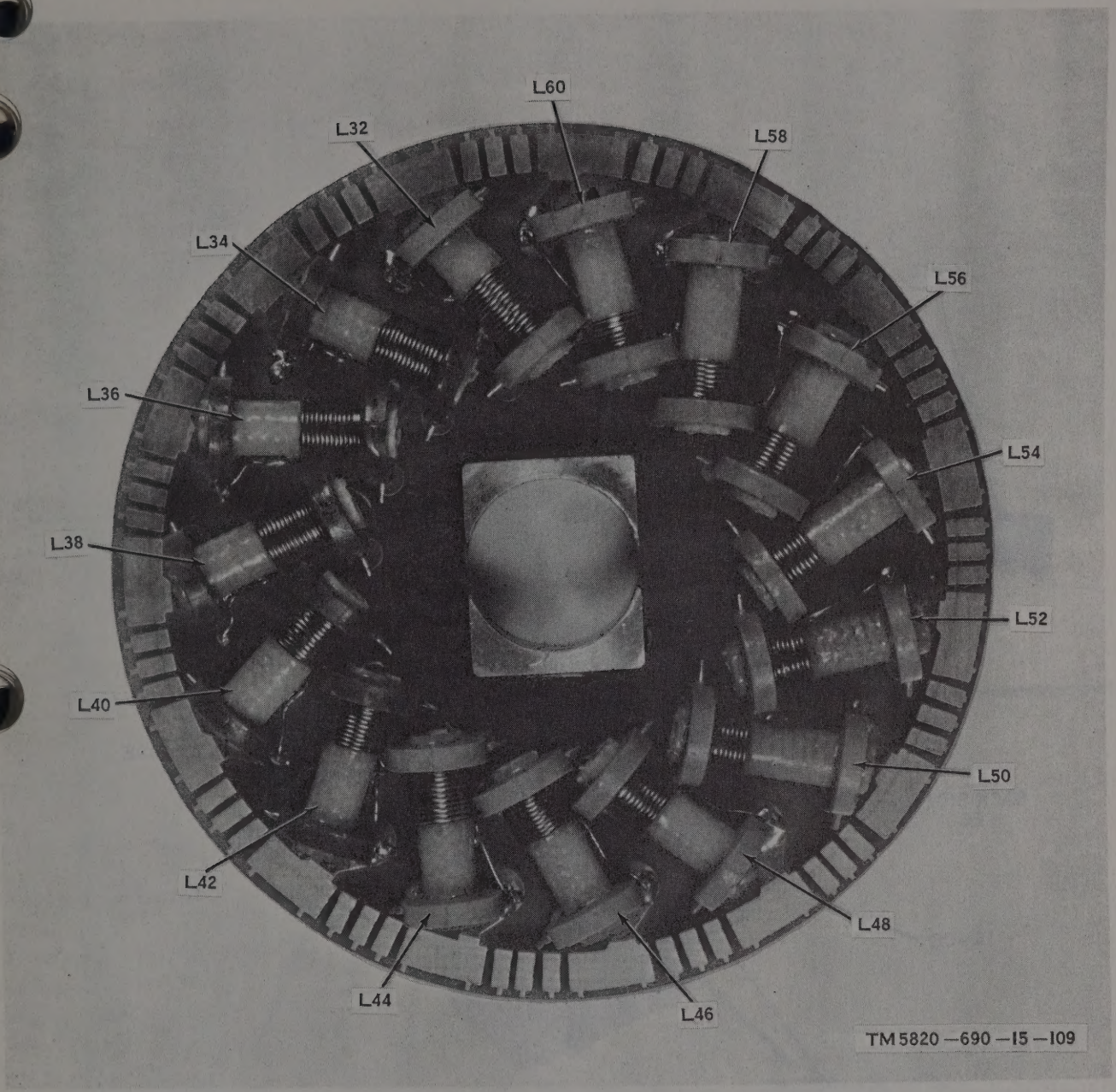

Figure 7-16.1. *Odd band* 1*st local oscillator coils on rotor (deck F) (R-*1421*B/URR).*

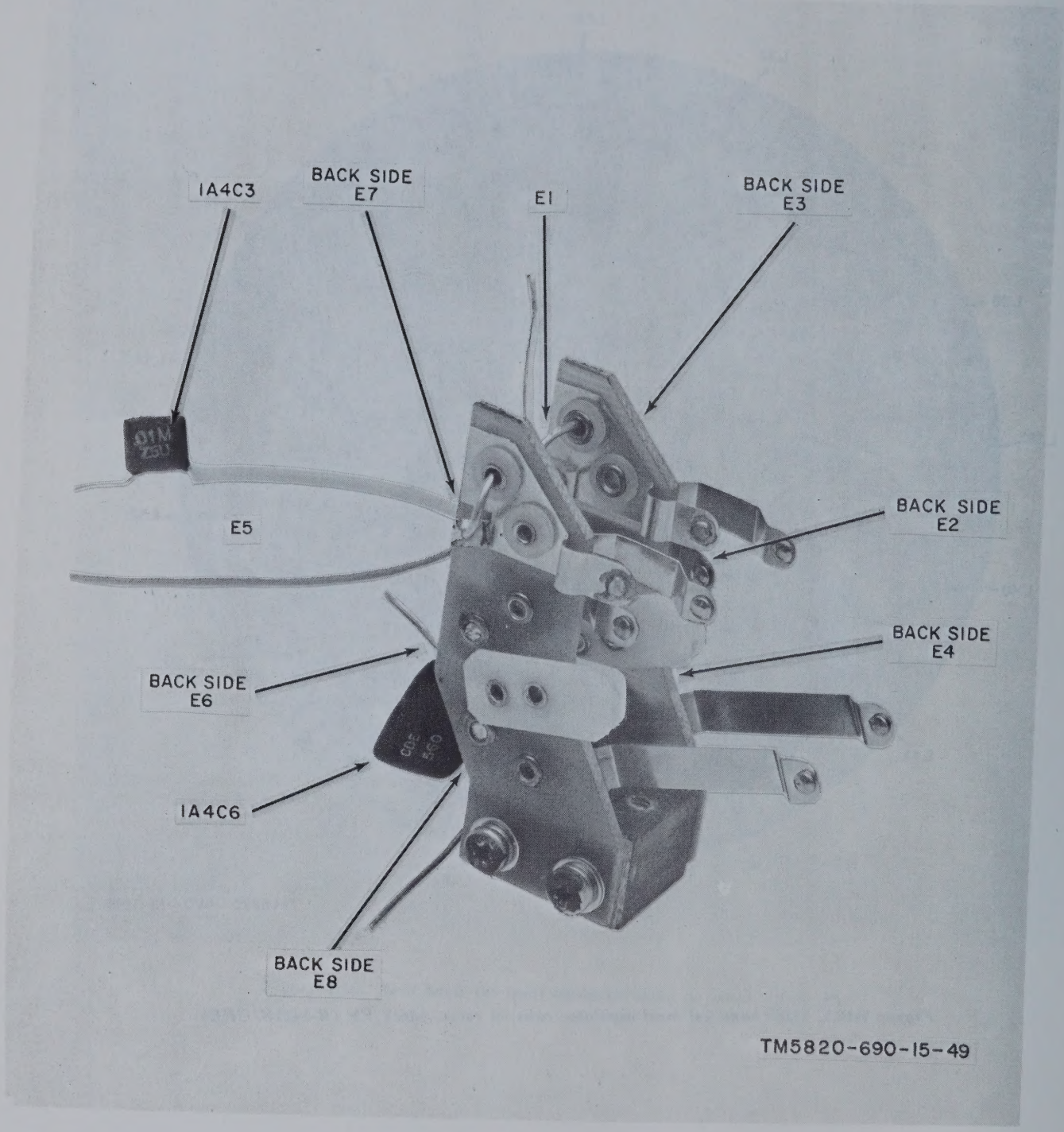

Figure 7-17. Stator decks A and B.

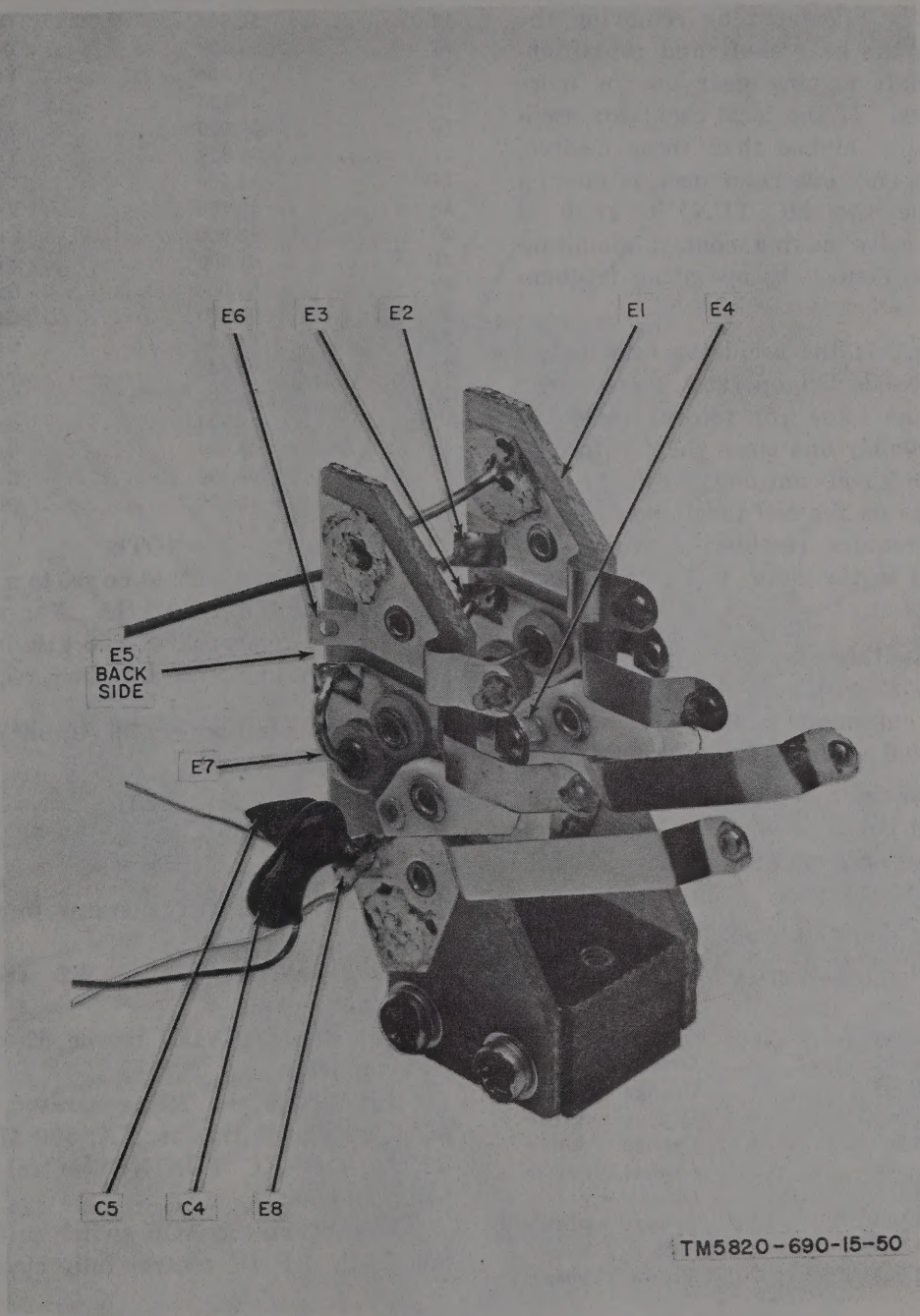

Figure 7-18. Stator decks C and D.

d. Bridging. Bridging of two coils at the same time may be alleviated by removing the E-snapring from the gear shaft and repositioning the rotor shaft driving gear one or more teeth as necessary. If the local oscillator oscillates at frequencies higher than those desired, check to see that only one rotor deck is making contact each time the MC TUNING knob is switched. Two coils making contact simultaneously will almost double the operating frequency.

e. Open Coils. If the oscillator fails to oscillate on some bands but operates correctly on others, remove the rotor (or rotors) from the band selector assembly and clean them with contact cleaner. Check coil continuity with the multimeter. The taps on the coil form and spots on the rotor may require resoldering where the coils are soldered to the rotor deck. If the coil still fails, replace it.

f. Buffer Output Level. Connect the output of buffer jack A4J3 to the 50-ohm probe of the voltmeter. The minimum signal level at this point should be 0.6 volt rms on all bands.

g. Buffer Modules. If the requirement of *c* above is satisfied but *f* gives a low level indication, check and/or replace buffer module A4A4A2 and A4A4A3.

h. 1st Local Oscillation Coils.

Band	*Oscillator frequency (MHz)*	*Color code*
1	41.5000	Orange - brown
2	42.500	Orange - red
3	43.500	Orange - orange
4	44.500	Orange - yellow
5	45.500	Orange - green
6	46.500	Orange - blue
7	47.500	Orange - purple
8	48.500	Orange - gray
9	49.500	Orange - white
10	50.500	Yellow - black
11	51.500	Yellow - brown
12	52.500	Yellow - red
13	53.500	Yellow - orange
14	54.500	Yellow - yellow
15	55.500	Yellow - green
16	56.500	Yellow - blue
17	57.500	Yellow - purple
18	58.500	Yellow - gray
19	59.500	Yellow - white
20	60.500	Green - black
21	61.500	Green - brown
22	62.500	Green - red
23	63.500	Green - orange
24	64.500	Green - yellow
25	65.500	Green - green
26	66.500	Green - blue
27	67.500	Green - purple
28	68.500	Green - gray
29	69.500	Green - white
30	70.500	Blue - black

NOTE

The oscillator should be set to a nominal frequency of ±30 kHz. For test purposes, a tolerance of ±75 kHz is acceptable; retuning is not then required.

7-10. Troubleshooting RF Amplifier Module A4A2

(fig. 7-19 and 7-20)

a. Preliminary.

(1) Connect RF generator to antenna jack A4J2.

(2) Disconnect wire W2 from between A4E7 and A4A3.

(3) Connect A4E7 to the 50-ohm probe of the voltmeter.

(4) Tune the RF generator to the midband frequency, that is, XX, 500 MHz. Set the RF receiver KC TUNING control to the midband position.

(5) Turn the AGC switch to OFF, and set the GAIN RF/IF control fully clockwise.

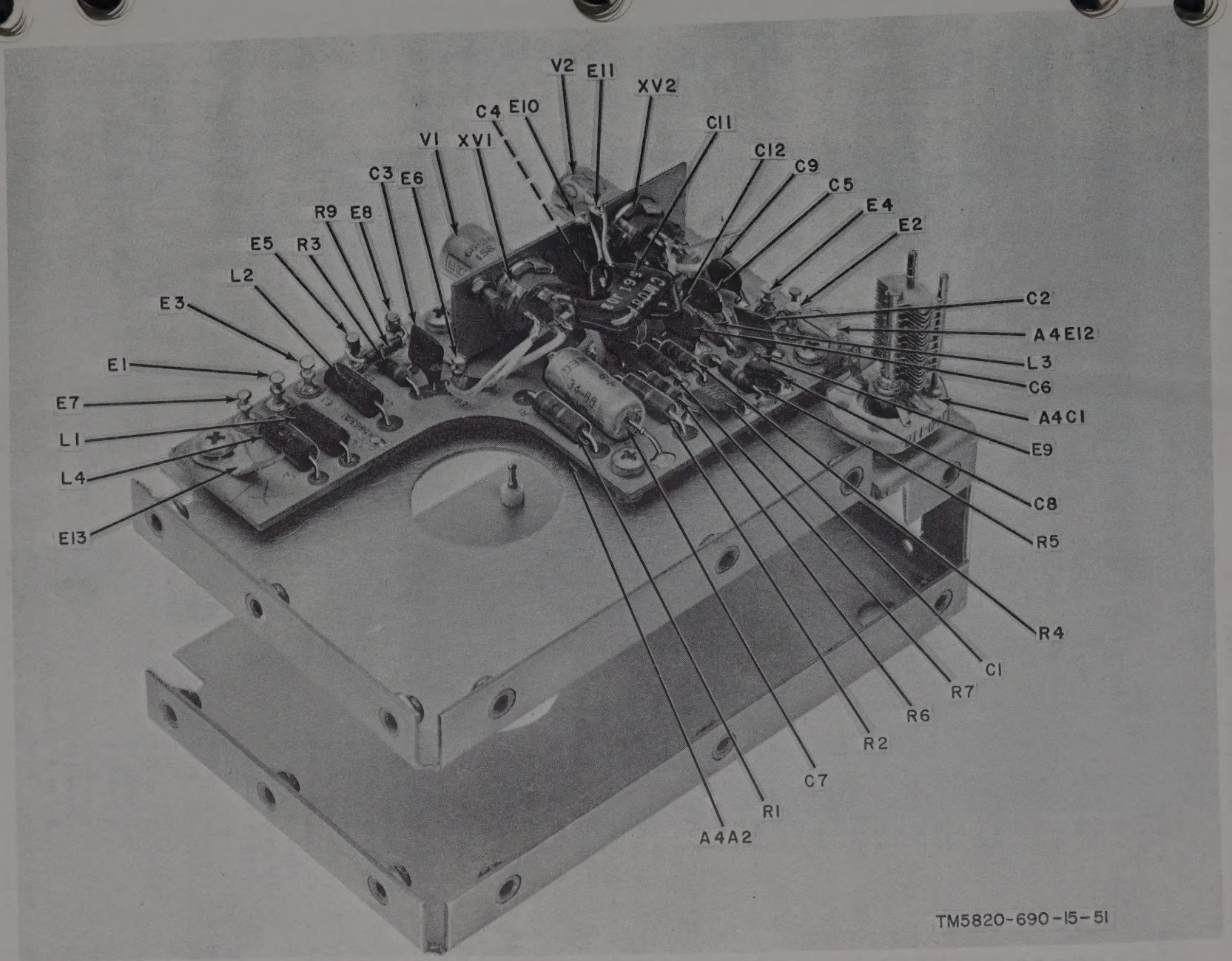

Figure 7-19. RF amplifier module A4A2.

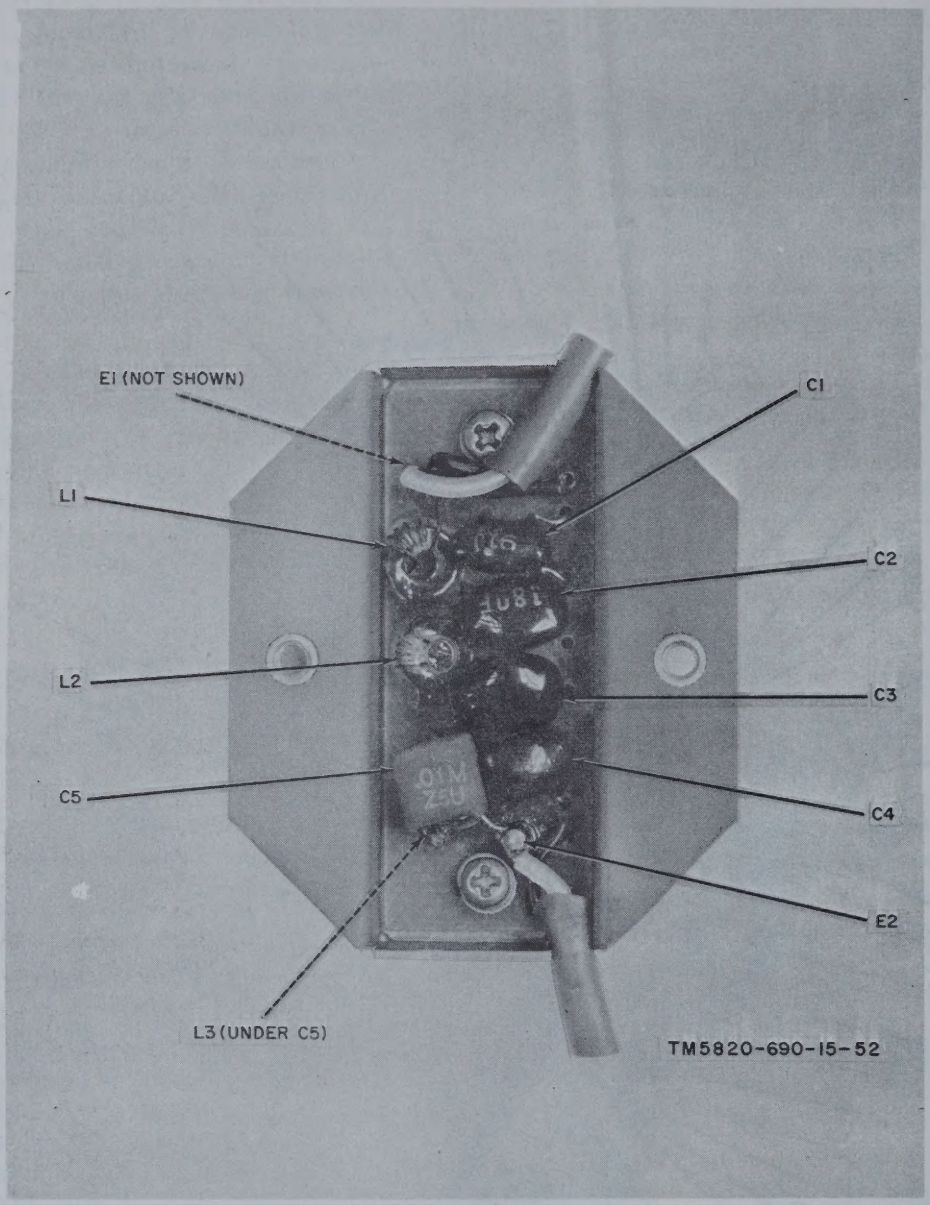

Figure 7-20. Input filter.

b. Overall Gain and Bandwidth.

(1) The overall power gain ((3) below) is given in *d* below. If the gain falls significantly short of these values, isolate the trouble to the output or input tuned circuit or the amplifier. Refer to the signal tracing diagram, figure 7-21.

(2) The overall 3-db bandwidth is shown typically in *d* below. Considerable latitude (approximately ±50 percent) should be permitted between the measured values and this chart. Regardless of the net 3-db bandwidth, the bandwidth of an isolated tuned circuit (either grid or plate) should be 50 percent wider than that measured of the two in combination.

(3) The gain in db at any point is —

$$\text{Gain} = 20 \log \frac{\text{V ouput}}{\text{V RF generator}}$$

Maintain input below 50 mv in all cases.

c. Gain Check of RF Amplifier Module. The chart is *d* below shows typical gain through the RF amplifier circuit. The chart in *e* below shows voltage and resistance of the RF amplifier jacks, terminals, and tube pins. In addition to the overall gain from J2 through V3, voltage gain is measured at the grid of V1, plate of V1, with the RF generator set to the level indicated, and then traced with the high impedance probe of the voltmeter. In all cases, be sure the coils are peak tuned. The chart in *f* below shows the frequency range of the RF amplifier coils. Allow approximately a two-to-one latitude in the voltages in *d* below.

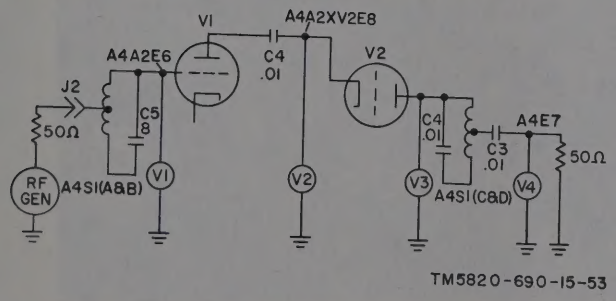

Figure 7-21. RF amplifier module signal tracing.

d. Typical Preamplifier Gain and 3-Db Bandwidth.

Band No.	*Frequency out (MHz)*	*Power gain A4J2 to C3 (db)*	*3-db bandwidth (kHz)*
1	1.5	29	640
2	2.5	32	400
3	3.5	30	600
4	4.5	31.5	425
5	5.5	31.0	400
6	6.5	30	550
7	7.5	30.6	500
8	8.5	29.5	475
9	9.5	27.0	650
10	10.5	28.0	700
11	11.5	28.5	750
12	12.5	29.0	600
13	13.5	27.5	700
14	14.5	31.0	400
15	15.5	30.0	400
16	16.5	29.4	700
17	17.5	29.0	700
18	18.5	28.5	700
19	19.5	28.2	650
20	20.5	27.8	600
21	21.5	27.8	700
22	22.5	27.0	550
23	23.5	25.6	600
24	24.5	25.6	400
25	25.5	26.3	550
26	26.5	25.7	600
27	27.5	25.2	550
28	28.5	23.0	650
29	29.5	24.0	900
30	30.5	23.0	900

e. Preamplifier and Band Selector Assembly Voltage and Resistance Chart.

Point	*Resistance*	*Voltage*
J2	Infinity	0
A4A2E5	1K to 500K (with variation of calibration control)	0
A4A2E3	1 K to 3 K	0
A4A2E1	47K	110 vdc
A4A2E7	0.7 ohms	6.3 vdc
A4A2E5	0 to 20 K (with variation of calibration control)	0
E8	47 K	110 vdc
A4A2E4	50 K	85 vdc
A4A2E2	50 K	85 vdc
A4A2E8	0	0
A4A2A6 (loaded)	1 K to 3 K	0
V1-8	68 ohms	0.3 vdc
V1-4	1 K to 3 K	0
V1-2	50 K	85 vdc
V2-8	150 ohms	0.6 vdc
V2-4	1 K to 3 K	0
V2-2	50 K	85 vdc
A4J3	0	0
A4J1	0	0

NOTE

All voltages and resistances are measured with respect to ground with a Multimeter.

f. Preamplifier tuning coils.

Band	Grid and plate coils Frequency range (MHz)	Color code
1	1.0 - 2.0	Brown
2	2.0 - 3.0	Red
3	3.0 - 4.0	Orange
4	4.0 - 5.0	Yellow
5	5.0 - 6.0	Green
6	6.0 - 7.0	Blue
7	7.0 - 8.0	Purple
8	8.0 - 9.0	Gray
9	9.0 - 10.0	White
10	10.0 - 11.0	Black
11	11.0 - 12.0	Brown-brown
12	12.0 - 13.0	Brown-red
13	13.0 - 14.0	Brown-orange
14	14.0 - 15.0	Brown-yellow
15	15.0 - 16.0	Brown-green
16	16.0 - 17.0	Brown-blue
17	17.0 - 18.0	Brown-purple
18	18.0 - 19.0	Brown-gray
19	19.0 - 20.0	Brown-white
20	20.0 - 21.0	Red-black
21	21.0 - 22.0	Red-brown
22	22.0 - 23.0	Red-red
23	23.0 - 24.0	Red-orange
24	24.0 - 25.0	Red-yellow
25	25.0 - 26.0	Red-green
26	26.0 - 27.0	Red-blue
27	27.0 - 28.0	Red-purple
28	28.0 - 29.0	Red-gray
29	29.0 - 30.0	Red-white
30	30.0 - 31.0	Orange-black

Section III. REMOVAL AND REPLACEMENT OF MAIN ASSEMBLIES

7-11. Front Panel A2 Removal and Replacement

Front panel A2 must be removed whenever 2d IF tuning unit A3 sub-chassis or 3d IF bandwidth selector A1A4 are removed.

a. Removal (fig. 7-22).

(1) Turn SELECT switch completely clockwise.

(2) Remove the MC TUNING, ANT, FINE TUNING (R-1421A/URR or CAL ADJ (R-1421B/URR) KC TUNING, and SELECT knobs.

(3) Remove all screws shown in figure 7-22.

(4) Remove the 3/8-inch nut which mounts the SELECT switch to the front panel.

(5) The panel may now be removed (remove it physically but do not disconnect the wires) by a slight vertical rocking motion. It may be rested on its remaining knobs.

b. Replacement.

(1) Grasp the front panel by each vertical edge, and slide it forward on the MC TUNING, ANT, FINE TUNING (R-1421A/URR) or CAL ADJ (R-1421B/URR) KC TUNING, and SELECT switch shafts with a slight vertical rocking motion.

(2) Replace the 3/8-inch SELECT switch nut. Replace all other screws with 1/2-inch 6-32 Phillips-head screws and one 8-32 panhead screw as shown in figure 7-22.

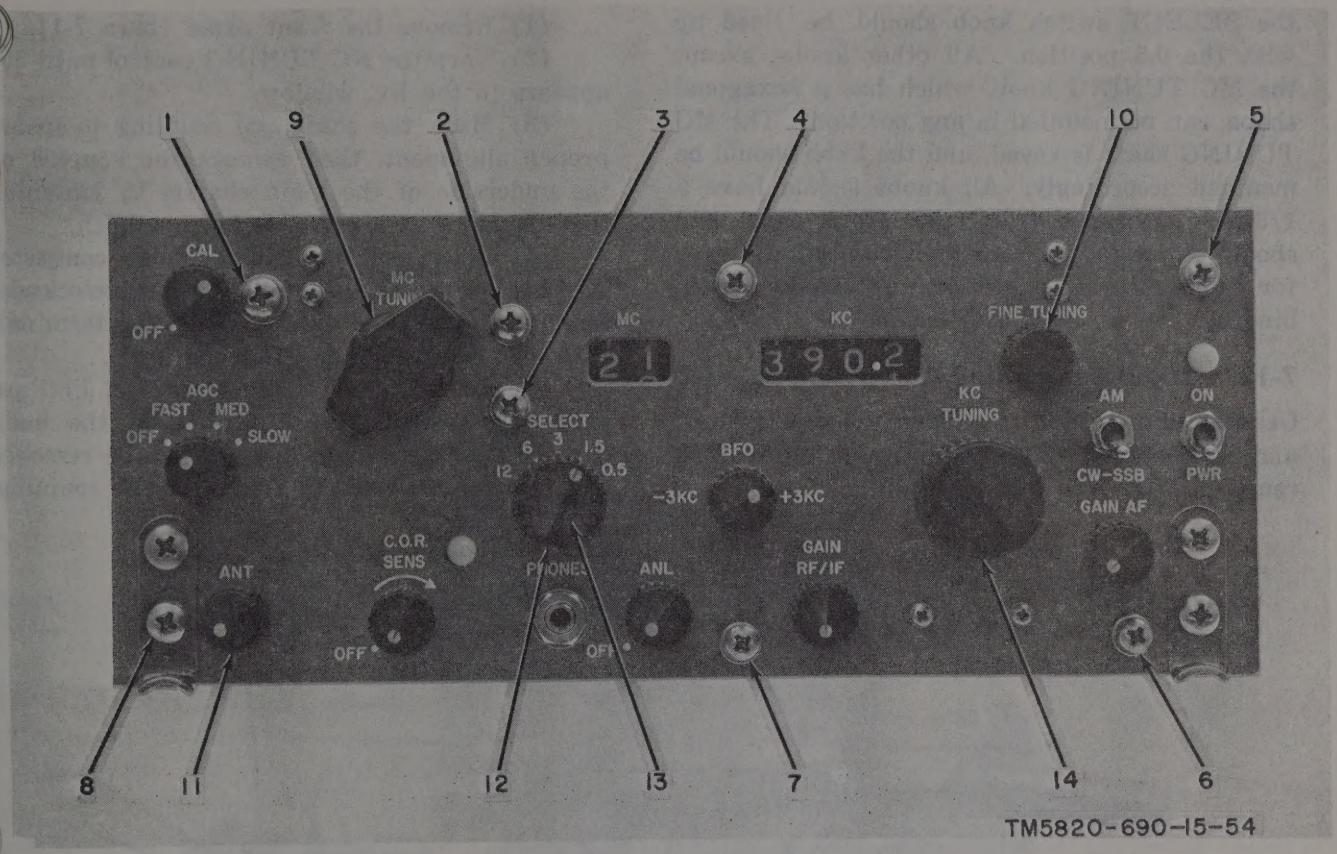

Figure 7-22. Receiver, Radio R-1421A/URR, front panel.

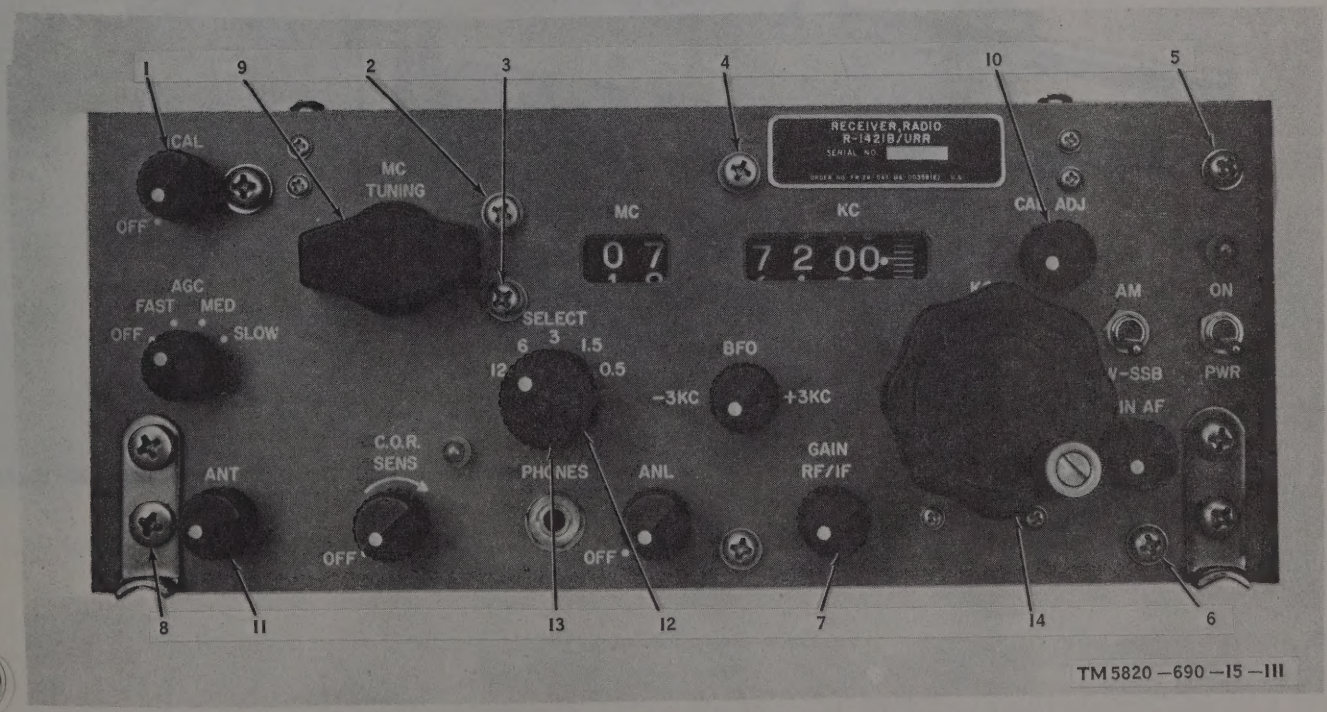

Figure 7-22.1. Receiver, Radio R-1421B/URR, front panel.

(3) Replace the knobs; the white dot on the SELECT switch knob should be lined up with the 0.5 position. All other knobs, except the MC TUNING knob, which has a hexagonal shape, can be mounted in any position. The MC TUNING shaft is keyed, and the knob should be mounted accordingly. All knobs should have a 1/8-inch clearance from the front panel and should be rotated through their respective ranges for smoothness of operation and freedom from binding.

7-12. 2nd IF Tuning Unit A3

Gearbox unit A3MP1 is removed when vfo A3A2 and 2d IF amplifier and 3d mixer A3A1 is to be removed (fig. 7-23 through 7-26).

a. Removal.

(1) Remove the front panel (para 7-11*a*).

(2) Turn the KC TUNING control until 50 appears in the KC window.

(3) Mark the shaft and coupling to insure proper alignment, then remove the coupler on the underside of the main chassis by loosening the setscrews with a No. 6 Allen wrench.

(4) Disconnect the coaxial cable connector A3A2J1 by rotating it in a counterclockwise direction. Unsolder the wires at terminals A3A1-8 and A3A2-E1. Tag the leads.

(5) Remove four 1/2-inch by 8-32 Phillips-head screws from the underside of the main chassis. The gearbox is now free to be removed by pulling it forward to free it of the coupling.

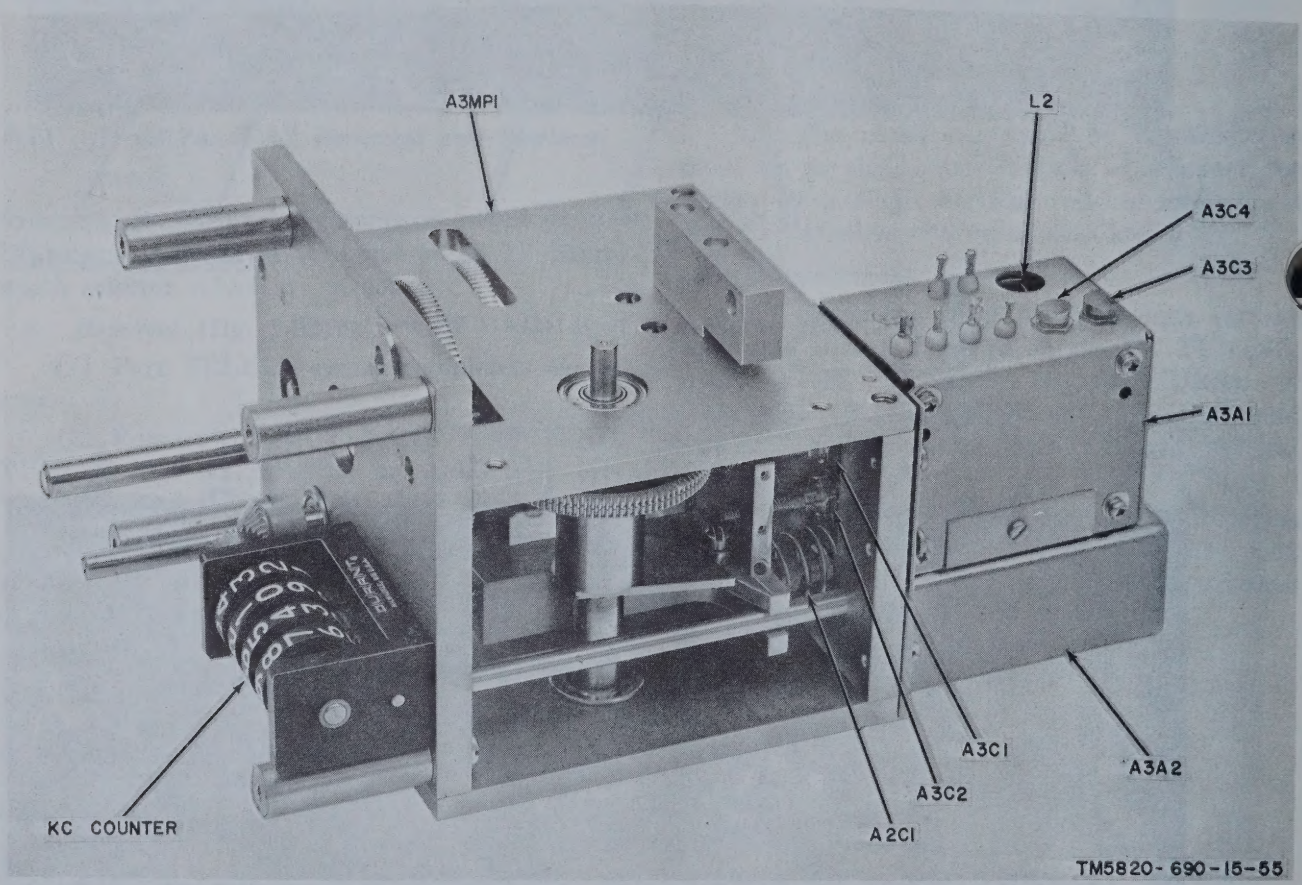

Figure 7-23. 2d IF tuning unit A3.

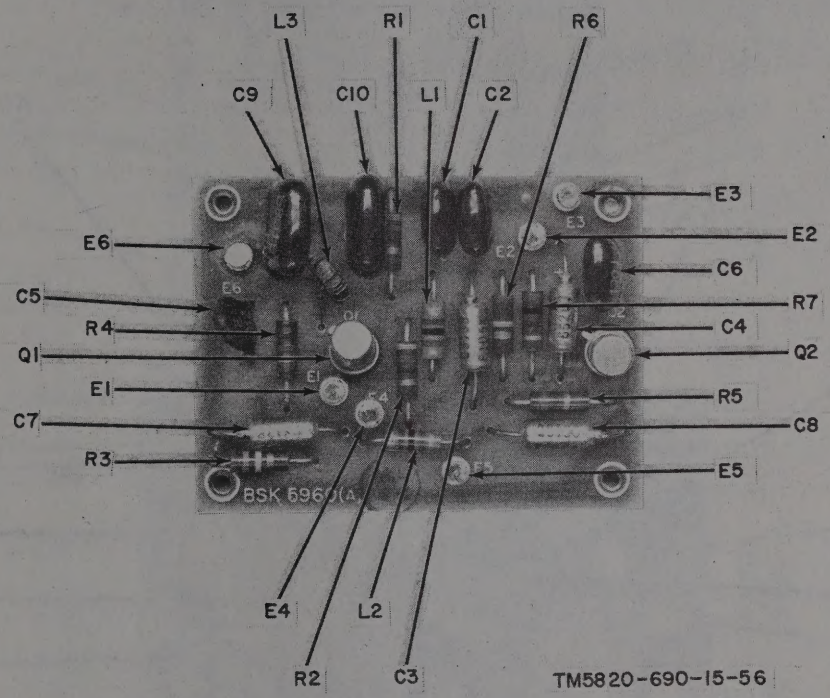

Figure 7-24. *3d mixer A3A1A2.*

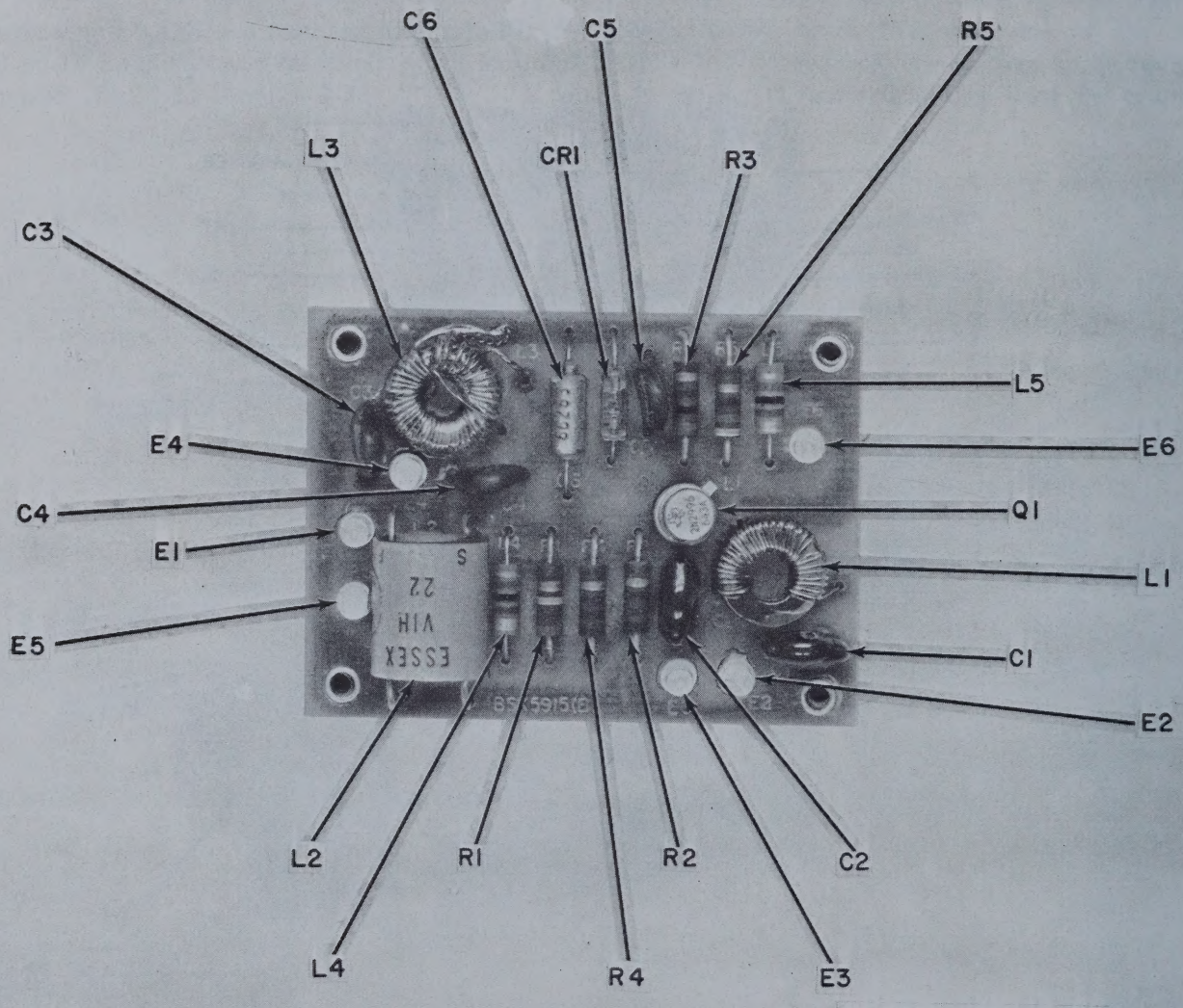

Figure 7-25. 2d IF amplifier (2- to 3-MHz) A3A1A1.

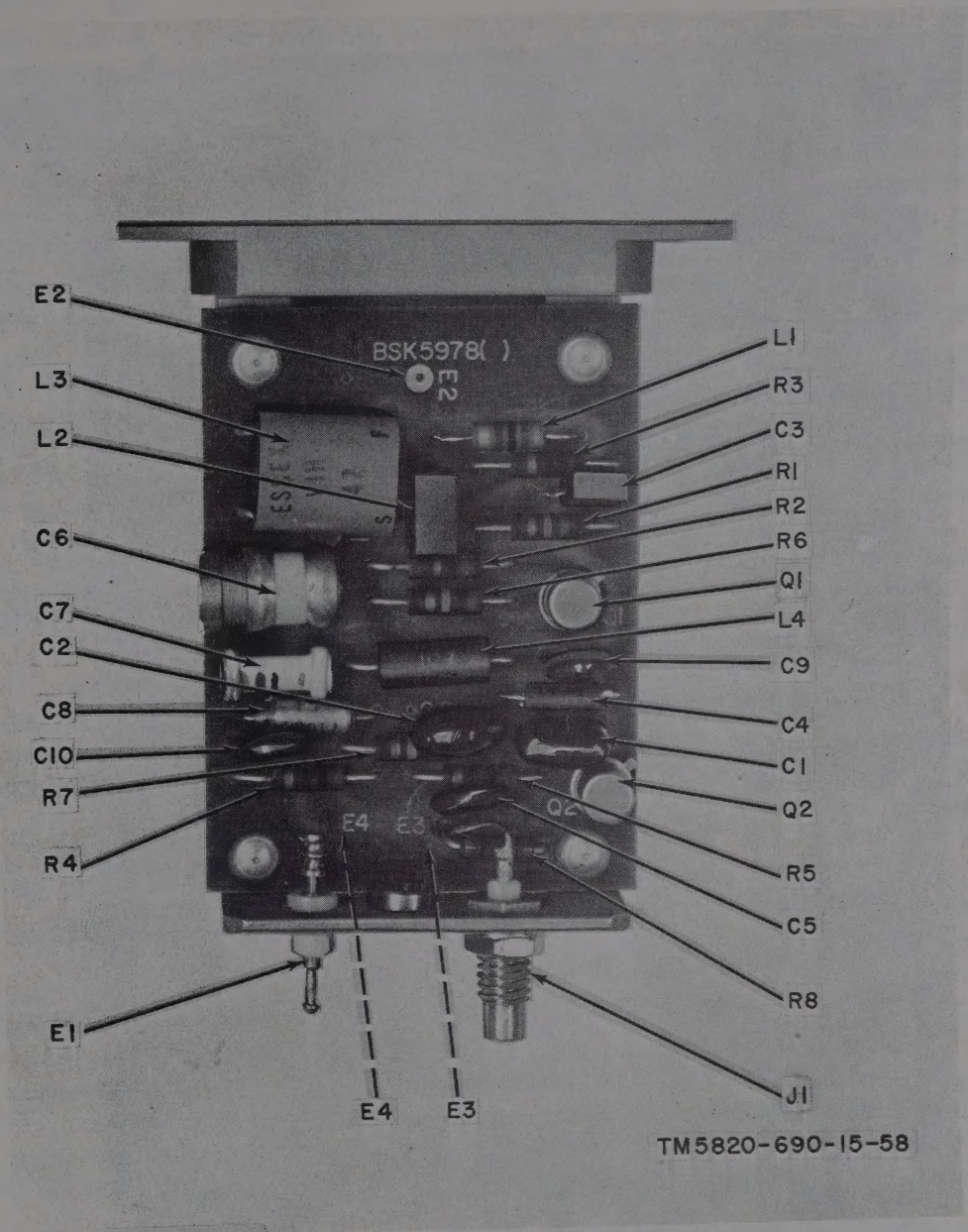

Figure 7-26. Variable frequency oscillator (3d L.O.) unit A3A2.

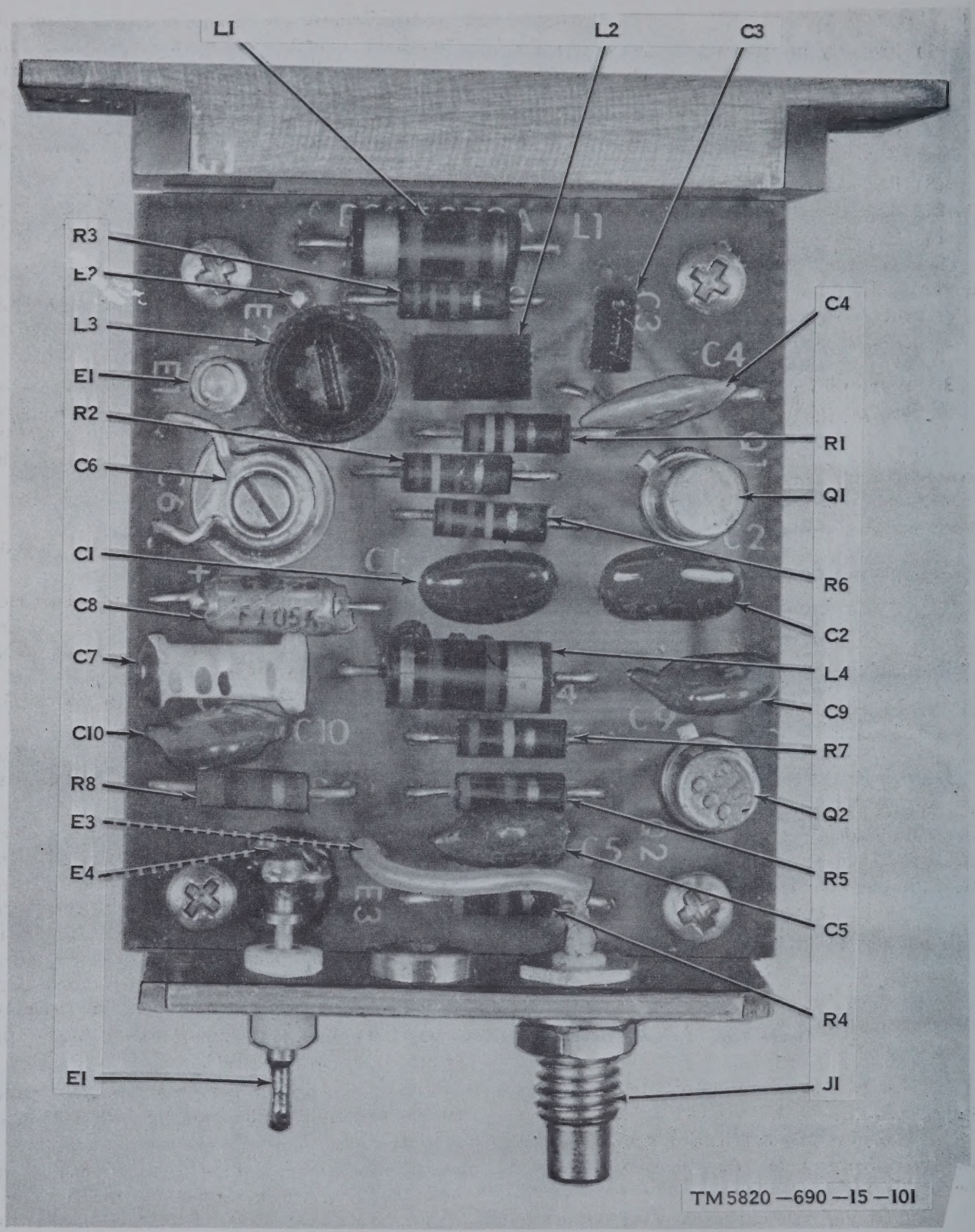

Figure 7-26.1. Variable frequency oscillator (3d L.O.) unit A3A2 (R-1421B/URR).

b. Replacement.

(1) Properly position the gearbox with respect to the front panel and main chassis. Slide the shaft back into the coupling.

(2) Replace the four 1/2-inch by 8-32 Phillips-head screws.

(3) Reconnect the coaxial connector to A3A2J1 and resolder the tagged leads.

(4) Engage and tighten the shaft coupling on the gear train. Be sure that the scribe marks on the shaft and coupler are aligned; then tighten the setscrews.

(5) Replace the front panel (para 7-11*b*).

7-13. Preamplifier and Band Selector Assembly A4 Removal and Replacement

a. General. Removal and replacement of the preamplifier and band selector assembly is the most complicated of all subchassis removals and replacements; however, most major repairs can be done without removal of the front end assembly. Do not proceed with removal unless there is no alternative.

b. Removal (fig. 7-4, 7-7 through 7-20 and 7-22).

(1) Disengage the tuning shaft from the MC indicator by loosening the 6-32 Allen setscrews at the brass coupler. Disengage the antenna tuning rod at the small stainless steel coupler. Disengage the coupling between the gearbox and the front end assembly by loosening the four 6-32 Allen setscrews, and slide the coupler backward. If mechanical tolerances are tight, remove the universal coupler when the A4 housing is loose. If tolerances still do not permit removal, remove assemblies A2 and A3.

NOTE

To insure realignment, scribe the couplers and shafts with a mark before removing them.

(2) Remove the fourteen 5/16-inch by 4-40 panhead screws from the front end cover.

(3) Remove the 3/8-inch diameter support bar from front panel A2, then from the A4 housing.

(4) Remove the bar extending from the front panel to front end assembly by loosening the 1/2-inch by 8-32 panhead screw from the inside of the front end assembly.

(5) Remove the five screws that mount the front end assembly to the main chassis. One screw is in the upper right-hand side where the assembly butts up against the rear panel. The other four screws, 1/2-inch 6-32 panhead, are on the underside of the main chassis around the bottom edge of the front end assembly.

(6) Remove the four 1/2-inch 6-32 panhead screws from the power supply rectifier and filter board.

(7) Unsolder the wires from the seven terminals on A4: A4FL1, A4FL2, A4FL3, A4FL4, A4E1, A4E2, and A4E3. Tag each wire with its terminal identification number.

(8) Preamplifier and band selector assembly A4 may now be removed. Be careful when removing the assembly, making certain that the protruding shafts do not catch in the wiring.

c. Replacement.

(1) Properly position the front end assembly on the main chassis.

(2) Resolder the wires that are color-coded red, brown, and red/white and the shielded cable from the agc detector and amplifier to their proper filters A4FL4, A4FL1, A4FL2, and A4FL3; also, resolder the other wires to E1, E2, and E3.

(3) Remount the power supply rectifier and filter board with four 1/2-inch by 6-32 panhead screws.

(4) Replace the five mounting screws which mount the assembly to the main chassis. One screw is a 1/2-inch panhead 8-32 located in the upper right-hand side where the assembly butts up against the rear panel. The other four screws are 1/2-inch 6-32 panhead and are on the underside of the main chassis around the bottom edge of the preamplifier and band selector assembly.

(5) Replace the support bar between the front panel and preamplifier.

(6) Replace the bar from the front panel to the preamplifier by two 1/2-inch 8-32 panhead screws.

(7) Engage the three couplers: one to the brass coupling which connects to the front end of the MC indicator behind the front panel; the second to the ANT tuning rod; and the third to the universal coupler on the underside of the main chassis. Tighten the setscrews on all couplers.

NOTE

Remounting the couplers properly with respect to their individual scribe marks will accurately connect the MC and KC indicators.

(8) Before mounting the cover on the front end assembly, rotate the individual shaft to insure smoothness of operation and freedom from binding.

(9) Remount the cover, and replace the fourteen 5/16-inch 4-40 panhead screws.

Section IV. REMOVAL AND REPLACEMENT OF SUBASSEMBLIES

7-14. 3d IF Bandwidth Selector A1A4

(fig. 7-13 and 7-27)

a. Removal.

(1) Remove the front panel (para 7-11*a*).

(2) Remove c.o.r. amplifier A1A12. Do not unsolder the wires to the c.o.r amplifier.

(3) Remove the two 1/4-inch by 6-32 mounting screws on the underside of the main chassis.

(4) Unsolder the coaxial cable from the front and back wafers of the switch. Tag the wires with terminal numbers before removal.

(5) The 3d IF bandwidth selector is now free to be removed.

b. Replacement.

(1) Properly position the 3d IF bandwidth selector with respect to the front panel and main chassis.

(2) Resolder the coaxial cables to the front and back wafers of the switch.

(3) Replace the two 1/4-inch by 6-32 Phillips-head screws to hold A1A4.

(4) Remount carrier-operated relay amplifier A1A12 with the four 1/4-inch by 4-40 panhead screws.

(5) Replace the front panel (para 7-11*b*).

7-15. Marker Generator A1A1

The marker generator module is removable without removing any of the other modules.

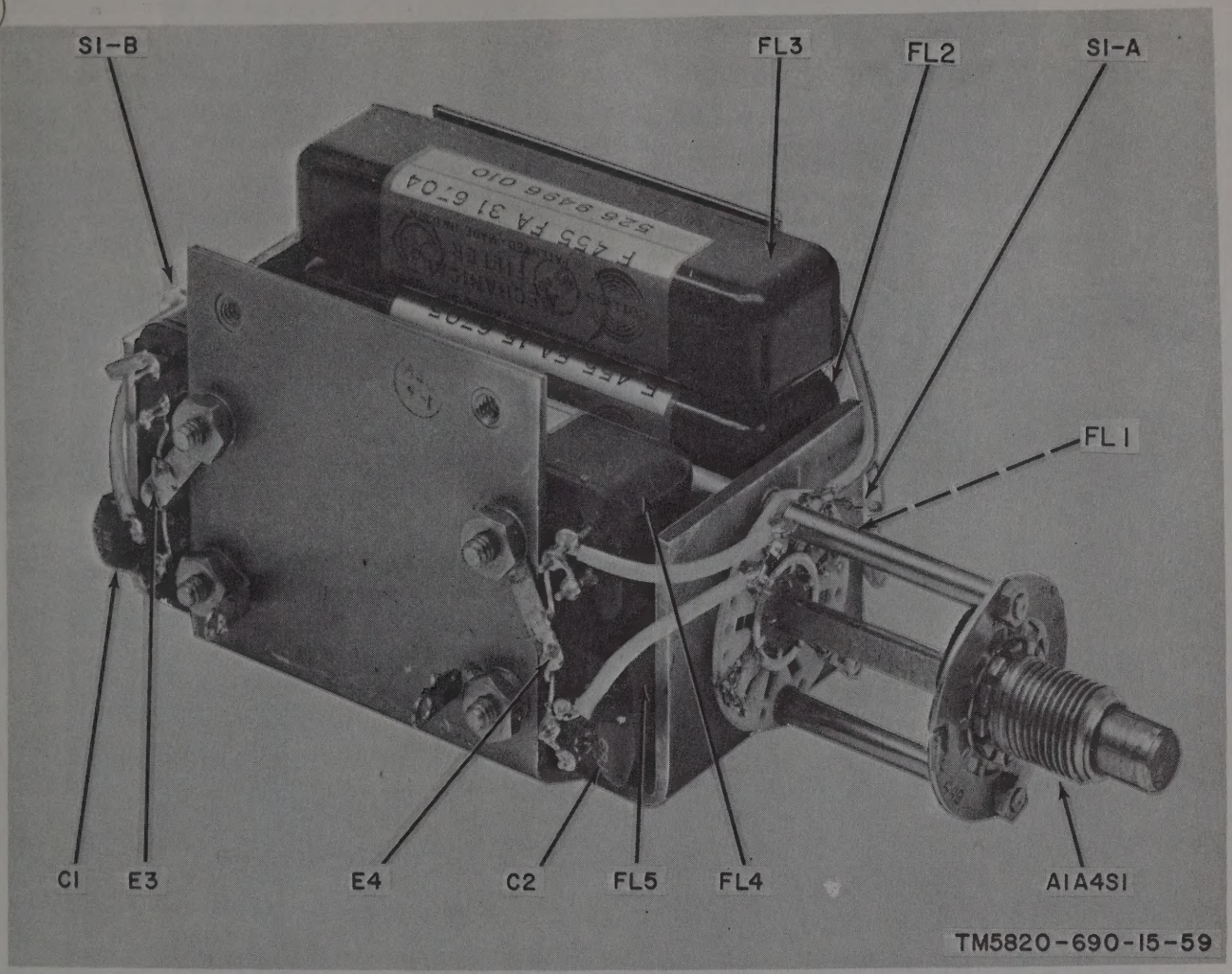

Figure 7-27. 3d IF bandwidth selector A1A4.

a. Removal (fig. 7-4 and 7-28).

(1) Unsolder the wires coming from the five terminals on the bottom of the marker generator. Tag the wires with terminal numbers (A1A1E1 through A1A1E5), and remove them.

(2) Remove the two 1/4-inch No. 4 Phillips-head screws, and remove the unit.

b. Replacement.

(1) Properly position the marker generator assembly on the main chassis. Fasten it with two Phillips-head screws.

(2) Resolder the wires to their respective points.

7-16. Harmonic Generator and Mixer A1A2

The harmonic generator and mixer can be removed without removal of any other module (fig. 7-3 through 7-6, 7-29, 7-30, and 7-31).

a. Removal.

(1) Unscrew the connector to A1A2J1.

(2) Tag the wires (with FL1, FL2, E1, E2, E10, and E9) before unsoldering them from A1A2.

(3) Unscrew the four No. 6 hex. nuts holding A1A2 to the main chassis.

(4) The unit is now free to be removed.

b. Replacement.

(1) Put the A1A2 unit into its proper location on main chassis A1.

(2) Fasten A1A2 to the main chassis with 6/32 nuts, use a flat washer, then a lockwasher, then a nut.

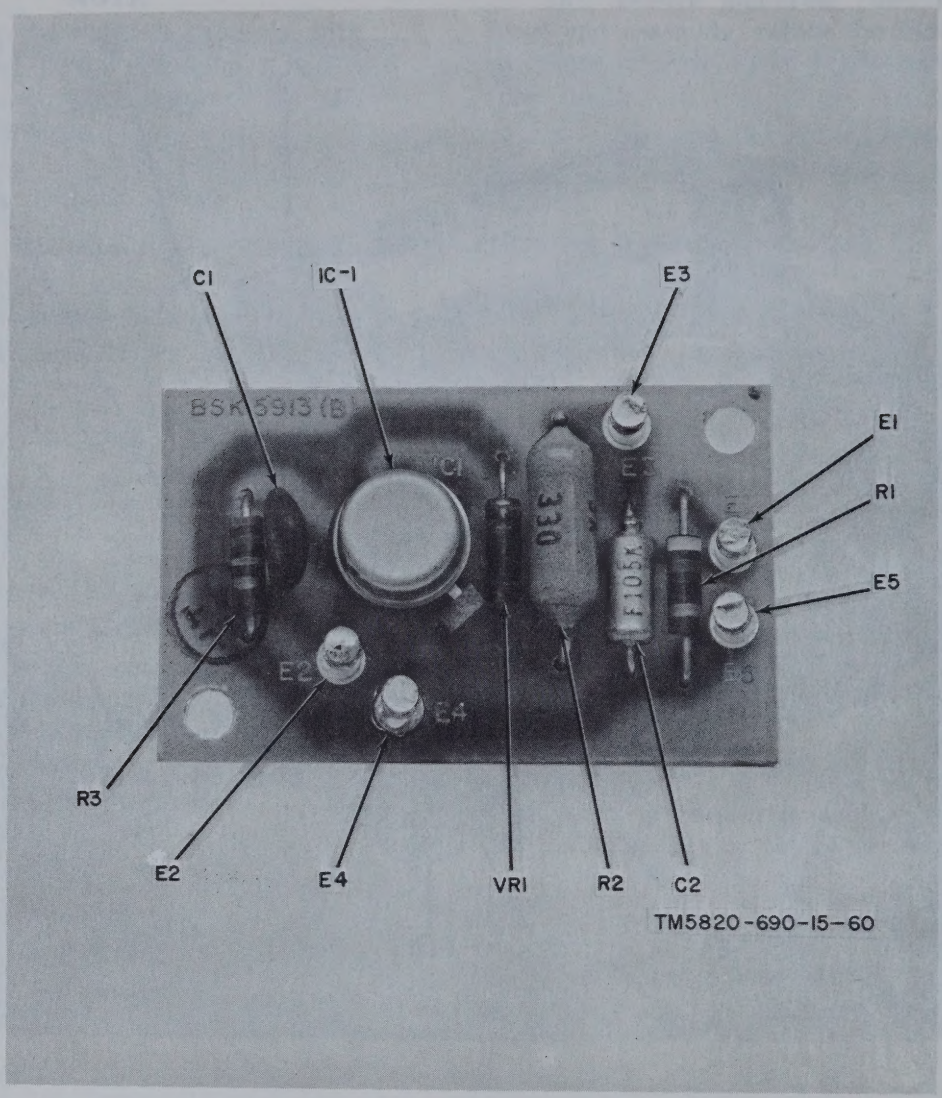

Figure 7-28. Marker generator A1A1.

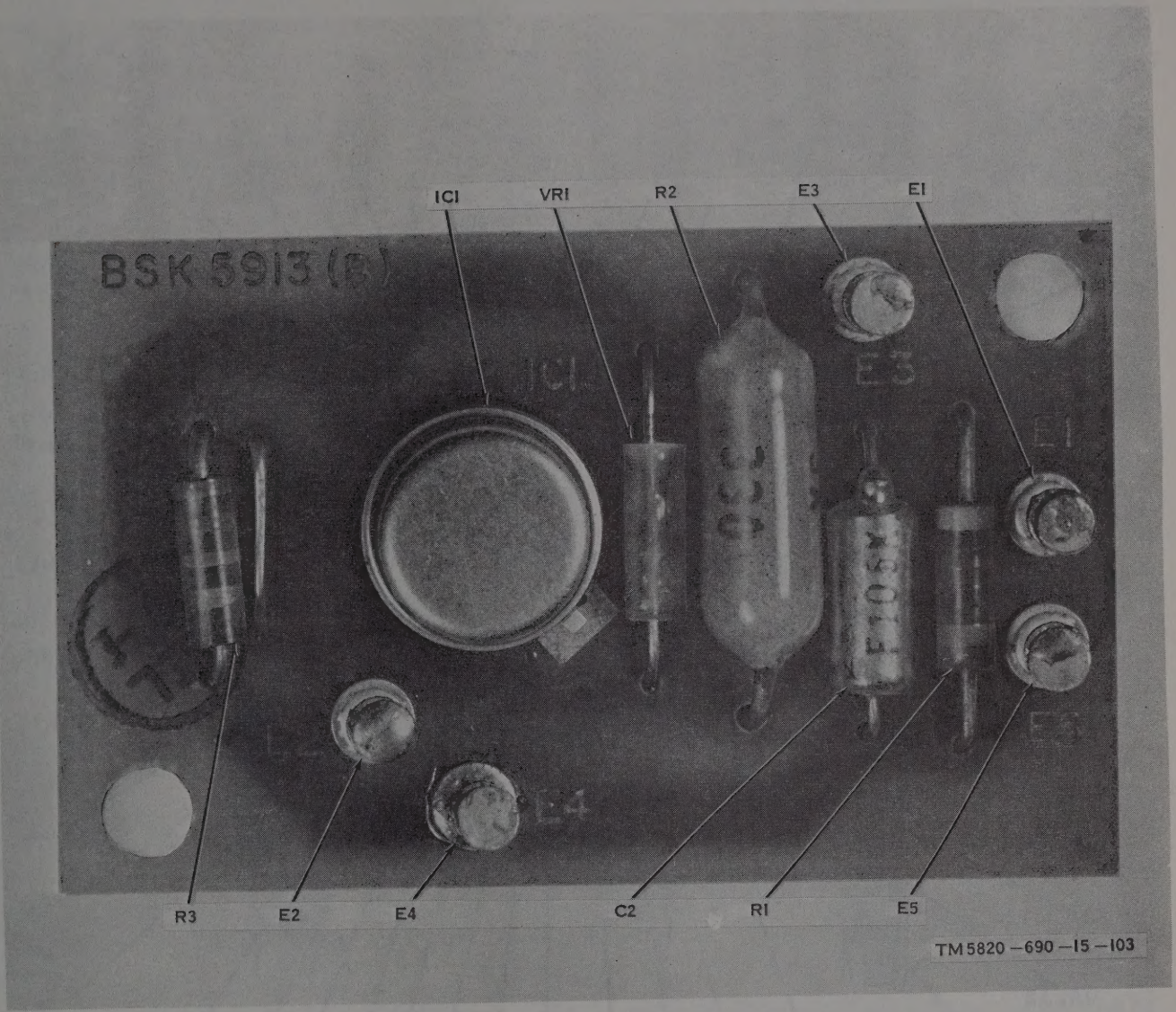

Figure 7-28.1. *Marker generator A1A1 R-1421/URR.*

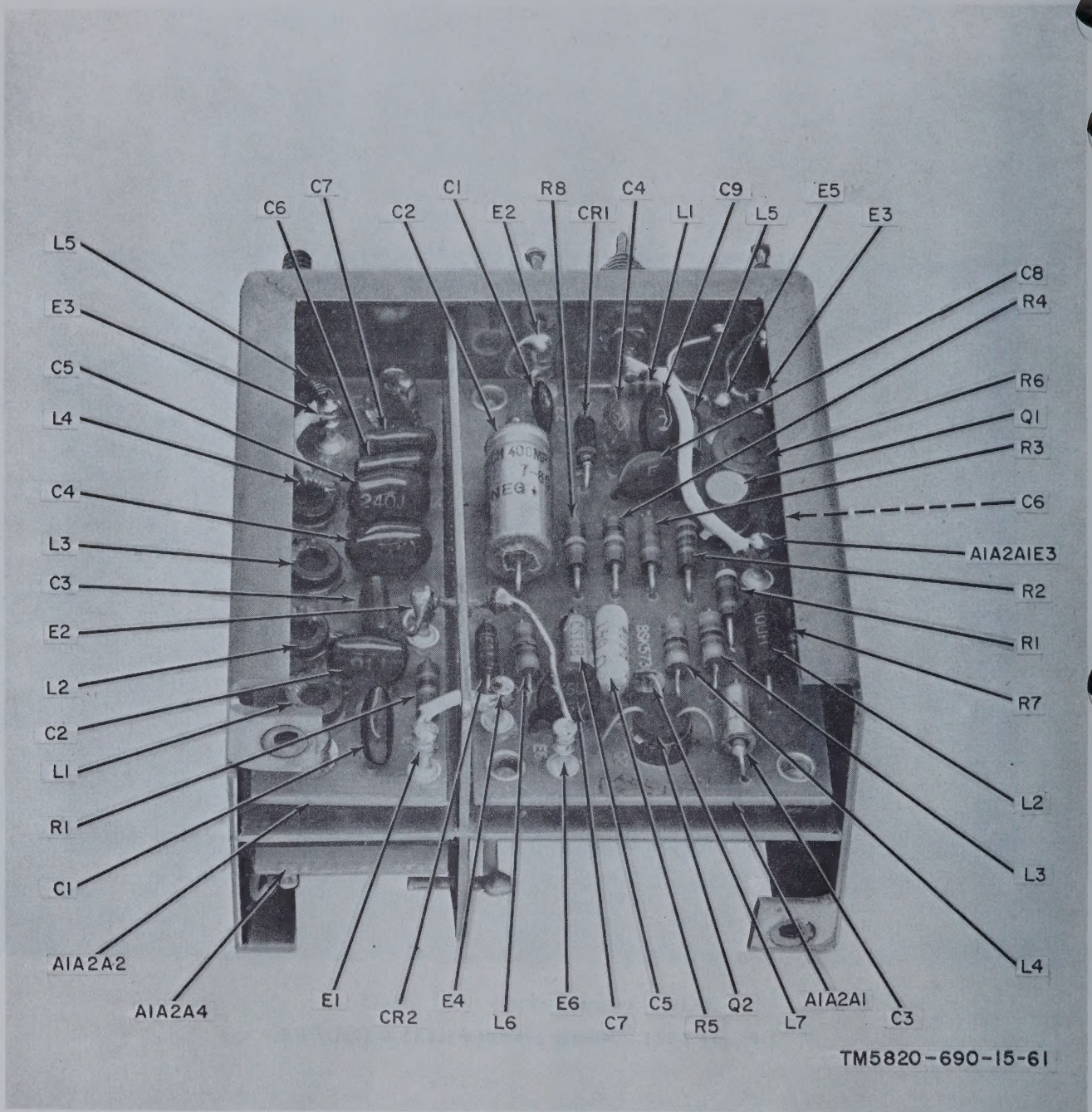

Figure 7-29. Harmonic generator and mixer A1A2, top view.

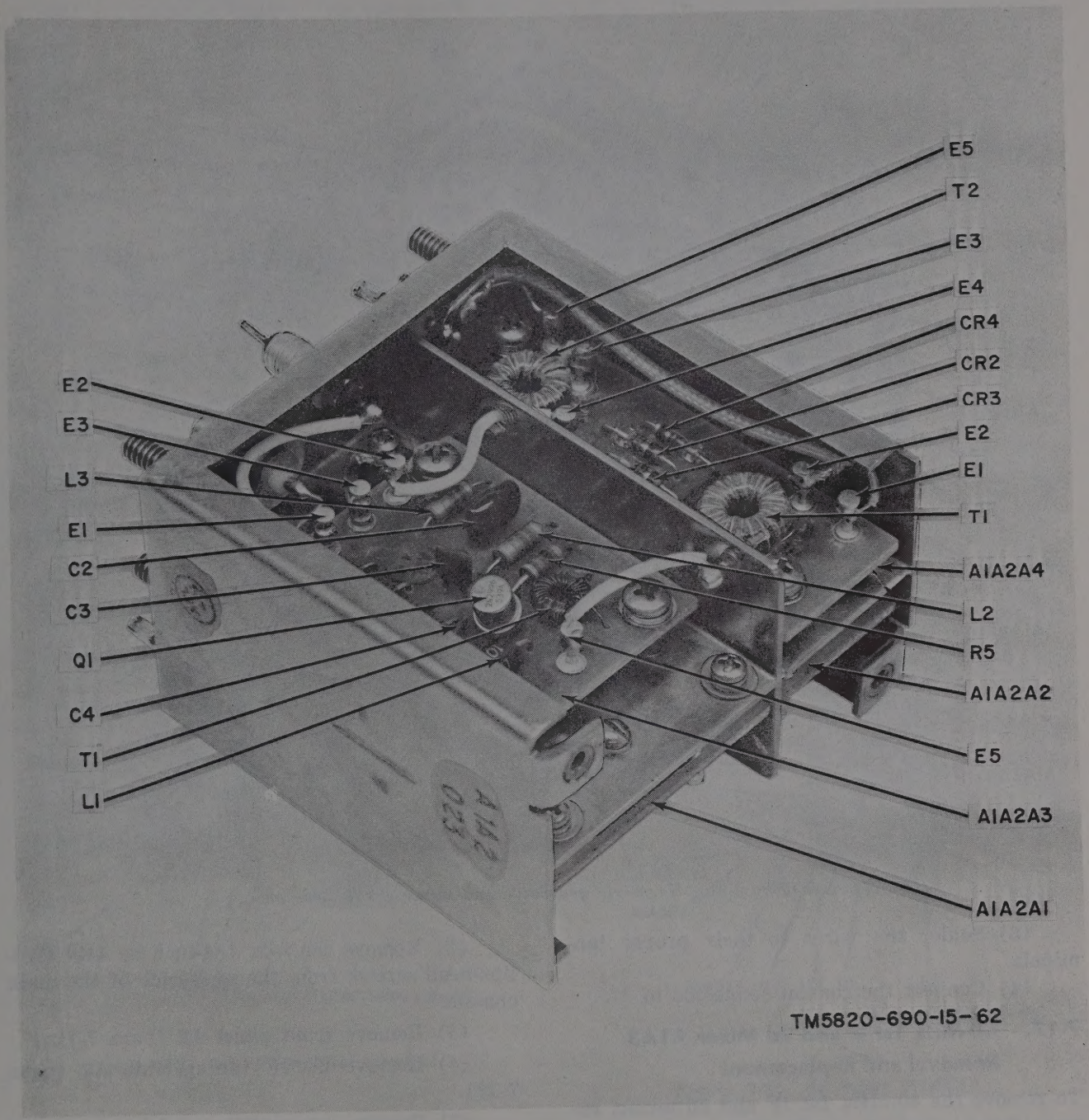

Figure 7-30. *Harmonic generator and mixer A1A2, bottom view.*

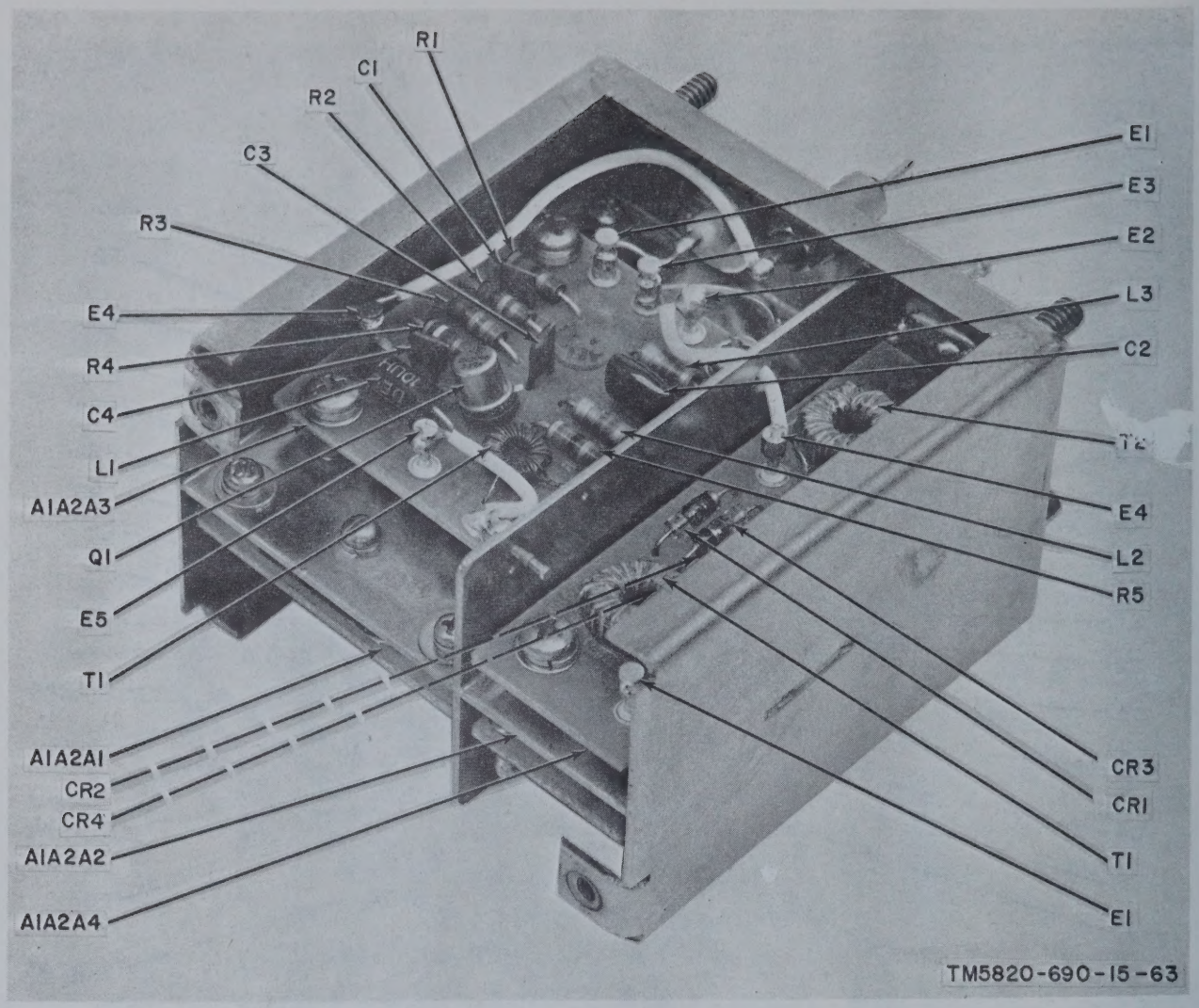

Figure 7-31. *Harmonic generator and mixer A1A2, side view.*

(3) Solder the wires to their proper terminals.

(4) Connect the coaxial connector to J1.

7-17. 40-MHz 1st IF and 2d Mixer A1A3 Removal and Replacement

To remove the 40-MHz 1st IF and 2d mixer, remove front panel A2 and 2d IF tuning unit A3, and loosen preamplifier and band selector assembly A4. Assembly A4 should not be removed unless necessary.

a. Removal (fig. 7-3, 7-4, 7-5, 7-32 through 7-35).

(1) Tag and unsolder the wires from A1A3 (mark E1, E2, E3, E4). Disconnect all connectors from A1A3J1 and A1A3J2 by turning them ccw.

(2) Remove the four 1/4-inch by 4-40 Phillips-head screws from the underside of the main chassis.

(3) Remove front panel A2 (para 7-11*a*)

(4) Remove 2d IF tuning unit A3 (para 7-12).

(5) Remove preamplifier and band selector assembly A4 (para 7-13).

(6) The 1st IF and 2d mixer is now free to be removed.

b. Replacement.

(1) Properly position the 40-MHz 1st IF and 2d mixer on the main chassis. Then replace the four 1/4-inch 4-40 Phillips-head screws and No. 4 split locks and washers.

(2) Replace assembly A4 (para 7-13*c*).

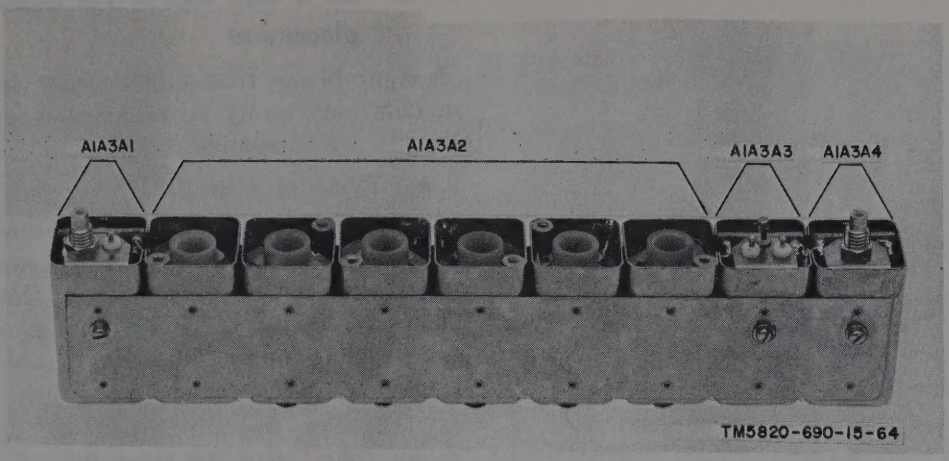

Figure 7-32. 1*st IF and* 2*d mixer* A1A3.

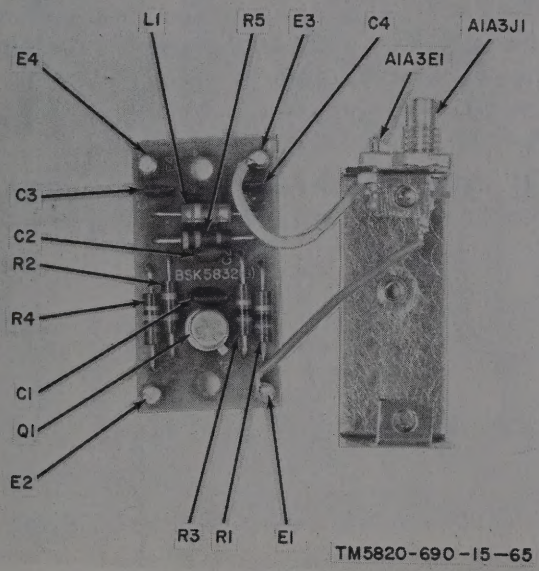

Figure 7-33. 1*st IF amplifier* A1A3A1.

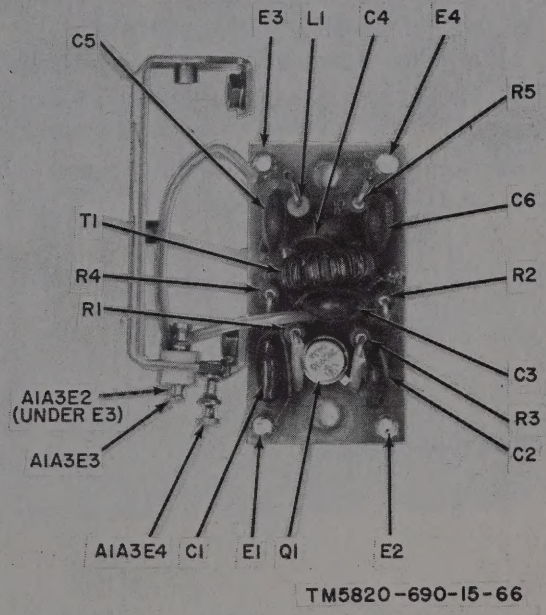

Figure 7-34. 2*d mixer* A1A3A3.

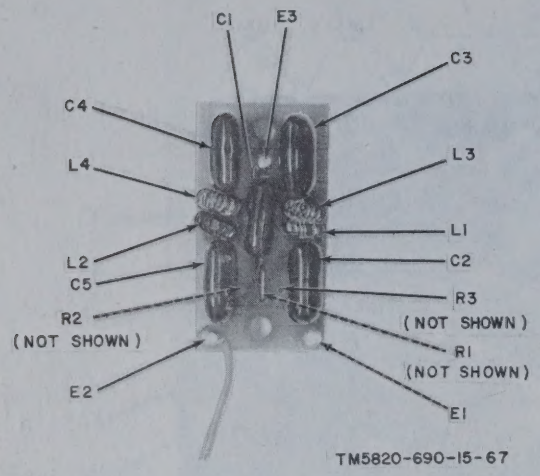

Figure 7-35. 2d IF filter and matching network A1A3A4.

(3) Replace assembly A3 (para 7-12*b*).

(4) Replace assembly A2 (para 7-11*b*).

(5) Resolder the wires to their proper E-terminals.

(6) Reconnect the coaxial cables to A1A3J1 and A1A3J2.

7-18. 3d IF and Agc A1A5 Removal and Replacement

Most problems that might occur in the A1A5 module may easily be repaired when the circuit boards are accessible.

a. Removal (fig. 7-3, 7-36, and 7-37).

(1) Remove the 3/8-inch reinforcement rod between front panel A2 and preamplifier and band selector A4 by removing the 8-32 screw from the upper left-hand corner of the front panel, and remove the cover of assembly A4 by removing the twelve 4-40 1/4-inch screws.

(2) Tag the wires (E1 to E14), and unsolder them from the terminals of A1A5.

(3) Remove the six 6/32 hex. nuts and washers.

(4) The A1A5 unit is now removable.

b. Replacement.

(1) Replace unit A1A5 on main chassis A1.

(2) Fasten unit A1A5 to the main chassis by replacing the 12 flat washers and lockwashers and the six 6/32 nuts.

(3) Resolder all wires to their proper terminals.

(4) Replace the 3/8-inch reinforcement rod between A1 and A4 with 1/2-inch 8-32 screws.

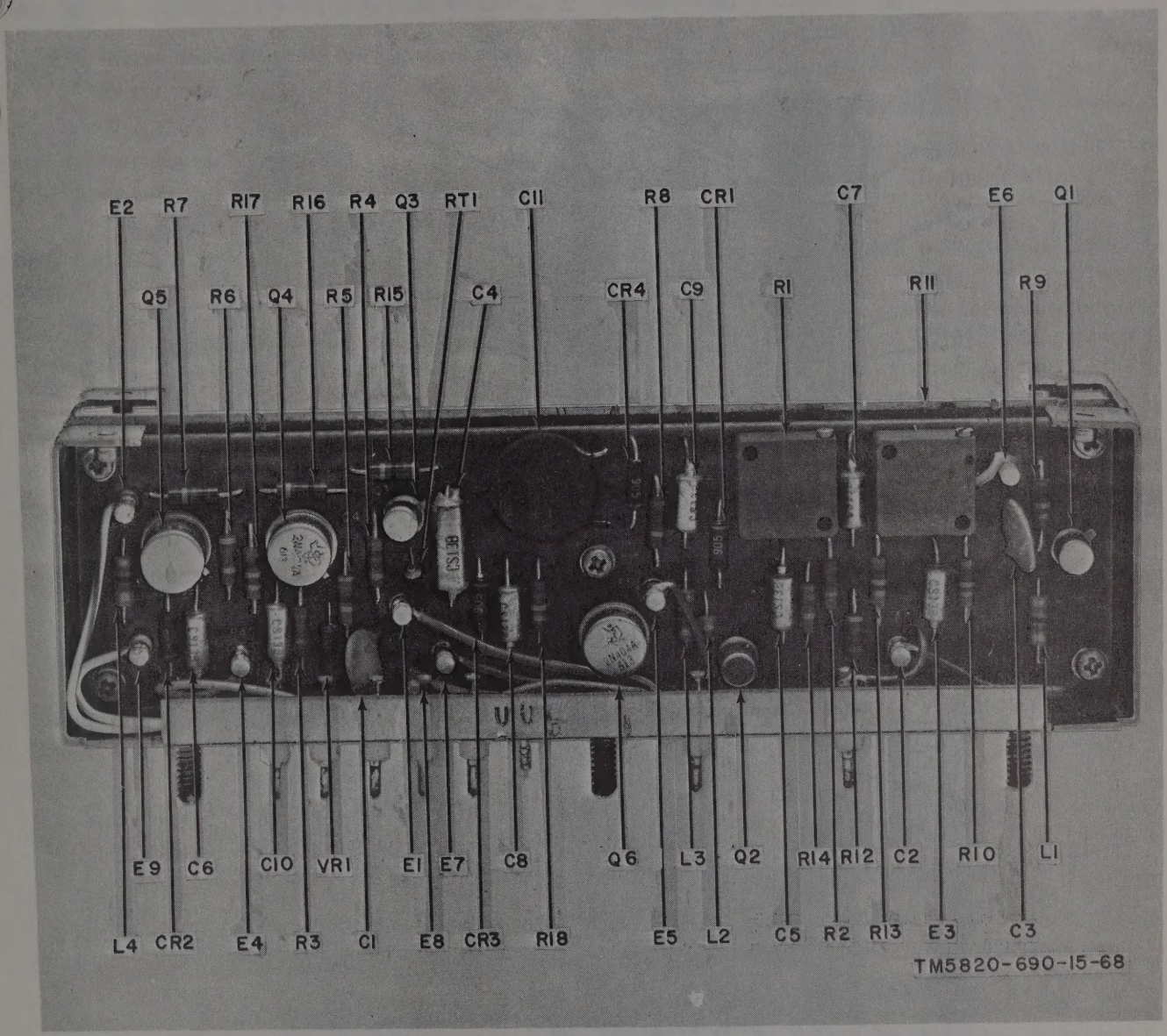

Figure 7-36. *3d IF and age A1A5.*

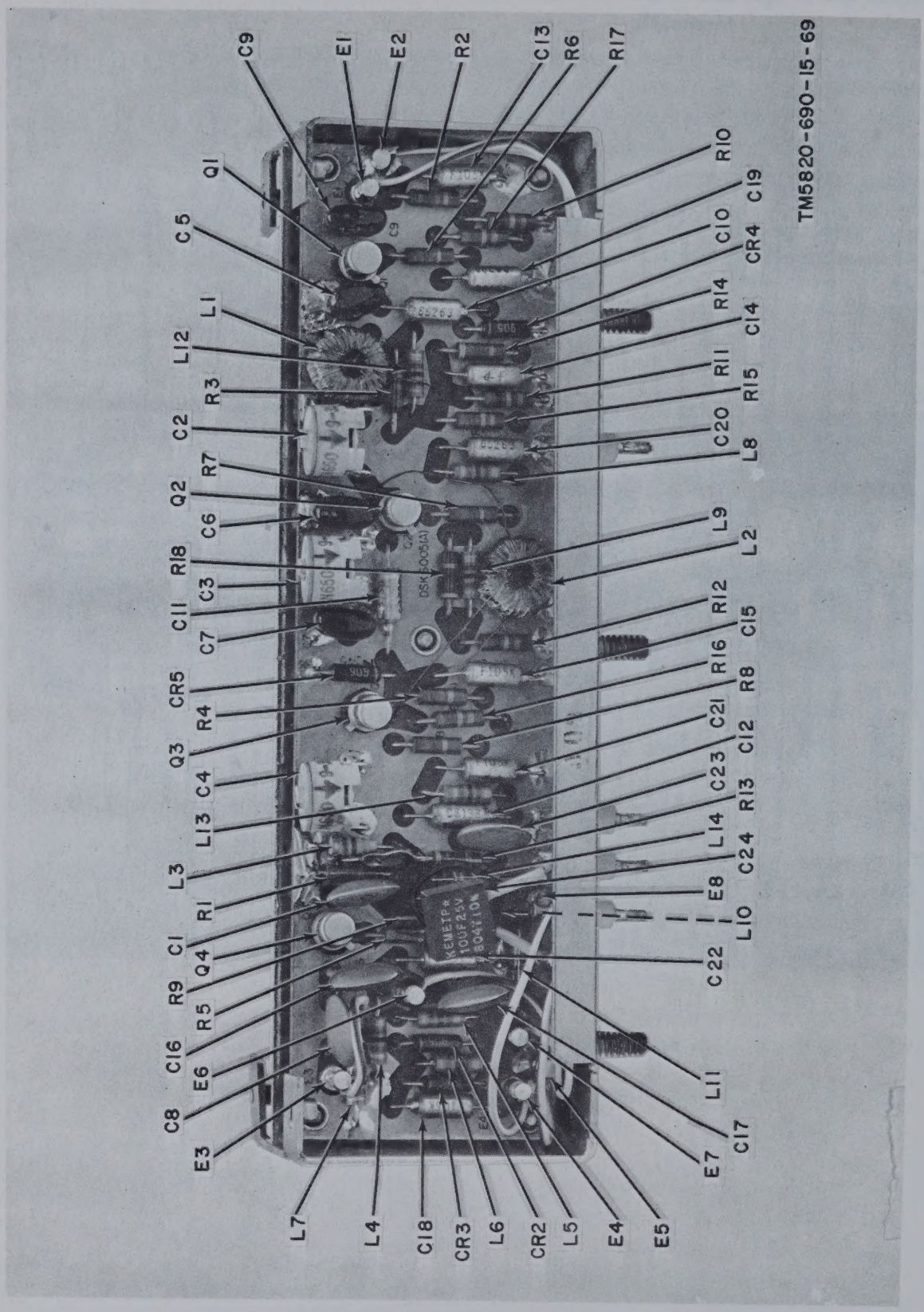

Figure 7-37. 3d IF amplifier and automatic noise limiter A1A5A1.

(5) Replace the cover on assembly A4 with the twelve 1/4-inch 4-40 Phillips-head screws.

7-19. Bfo and Detector A1A6 Removal and Replacement

Module A1A6 can be removed without removing any others (fig. 7-3 and 7-38).

a. Removal.

(1) Tag the wires with their terminal numbers (A1A6E1 through A1A6E7), and unsolder them.

(2) Remove the two 4/40 Phillips-head screws and washers, and remove the assembly.

b. Replacement.

(1) Replace the bfo and detector assembly on the main chassis with two 4 40 Phillips-head screws and washers.

(2) Resolder the wires to the proper E-terminals.

7-20. Audio Amplifier A1A7

The audio amplifier can be removed without removing other units (fig. 7-3 and 7-39).

a. Removal.

(1) Loosen the four 6-32 3/8-inch screws from the bottom of the chassis.

(2) Tag the wires with terminal numbers (A1A7E1 through A1A7E10), and unsolder them. Move the unit carefully to reach all the terminals.

(3) The unit can now be removed.

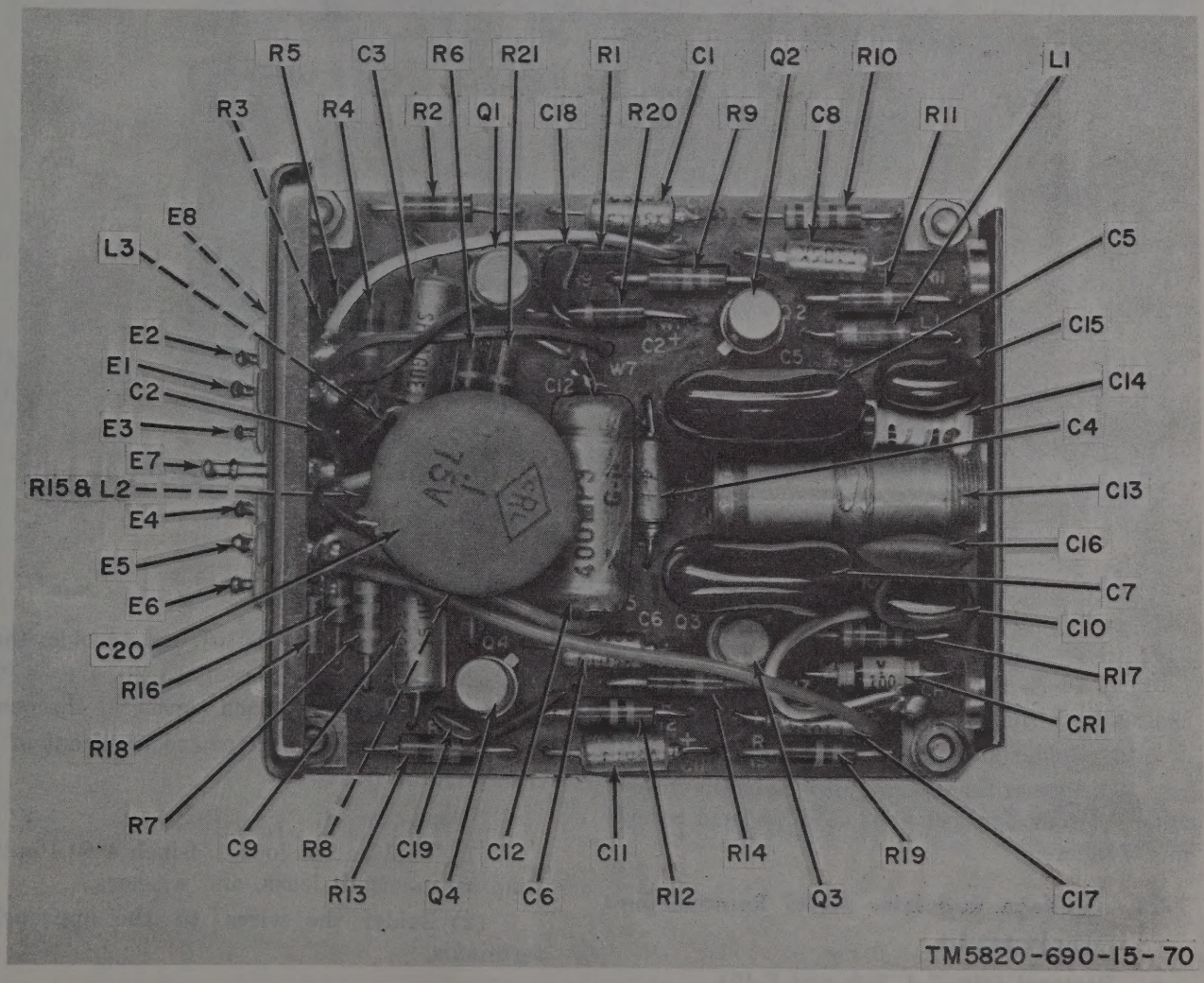

Figure 7-38. Bfo and Detector A1A6.

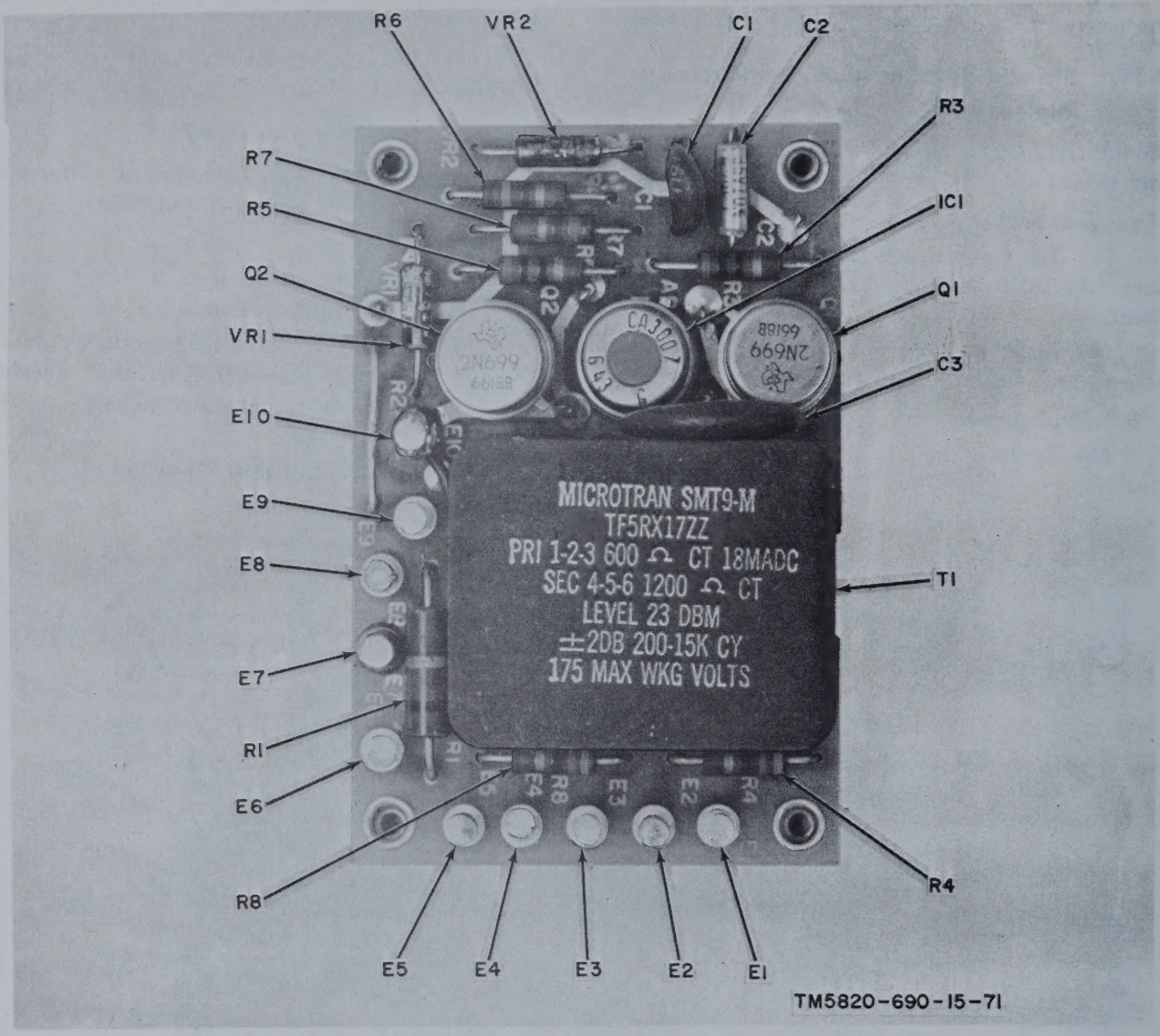

Figure 7-39. Audio amplifier A1A7.

b. Replacement.

(1) Place the audio amplifier in the main chassis with the wires adjacent to the terminals.

(2) Solder all wires to the proper terminals.

(3) Fasten the assembly to the main chassis with the four 3/8-inch 6-32 Phillips-head screws and washers.

7-21. Voltage Regulator A1A9 Removal and Replacement

a. Removal (fig. 7-4, 7-6, and 7-40).

(1) Tag the wires with terminal numbers (A1A9E1 through A1A9E10), and unsolder them.

(2) Remove the four 1/4-inch 4-40 Phillips-head screws from each corner of the board.

(3) Slide the board toward the front of the receiver, and lift it out.

b. Replacement.

(1) Replace the four 1/4-inch 4-40 Phillips-head screws, split locks, and washers.

(2) Solder the wires to the appropriate terminals.

7-22. Rectifier Filter A1A8 Removal and Replacement

The removal of this unit requires the removal of back panel A5 (para 7-25).

a. Removal.

(1) Remove back panel A5 (fig. 7-3 and 7-41).

(2) Tag the wires with the terminal numbers, and unsolder all wires leading into the board.

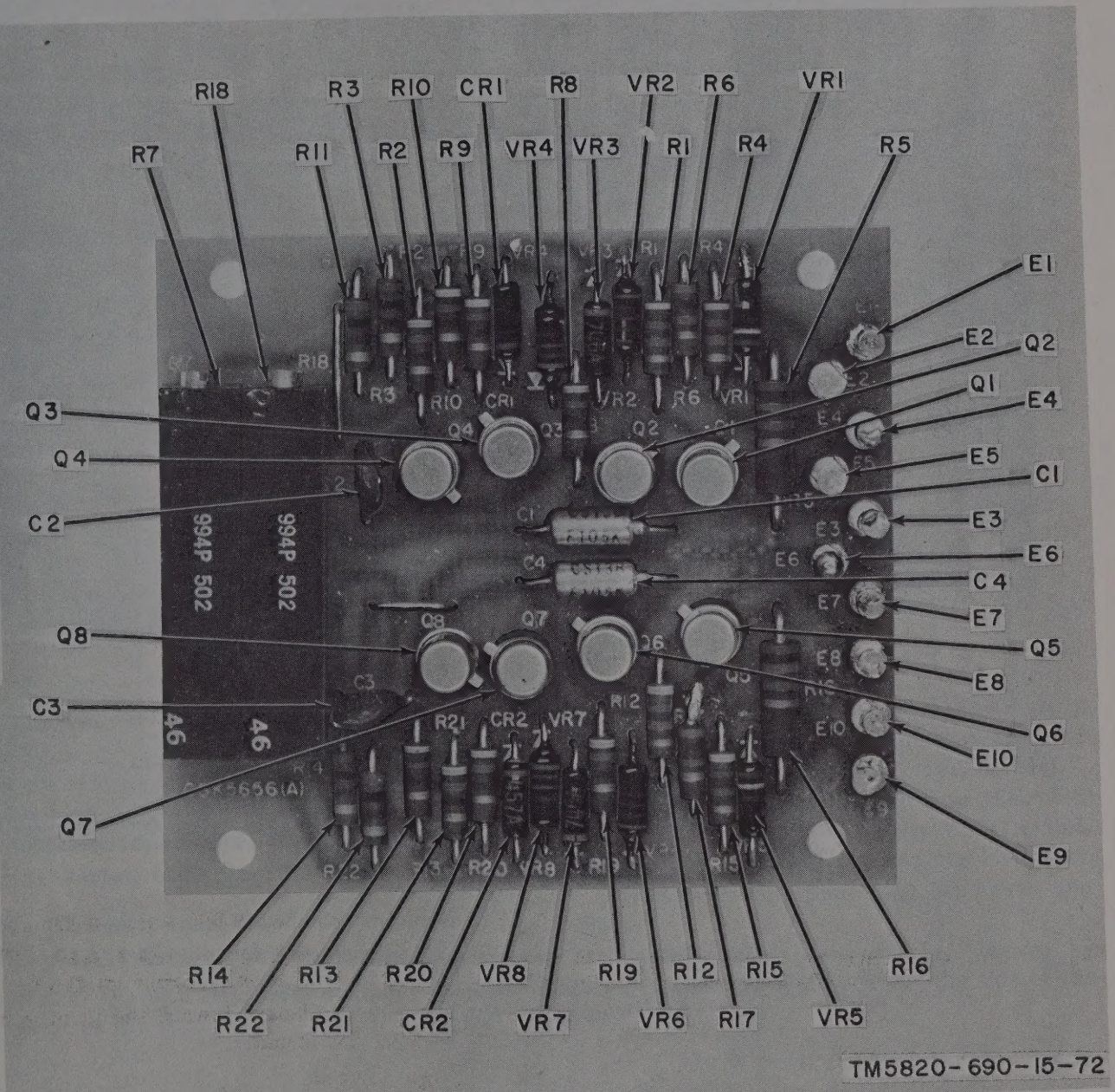

Figure 7-40. Voltage regulator A1A9.

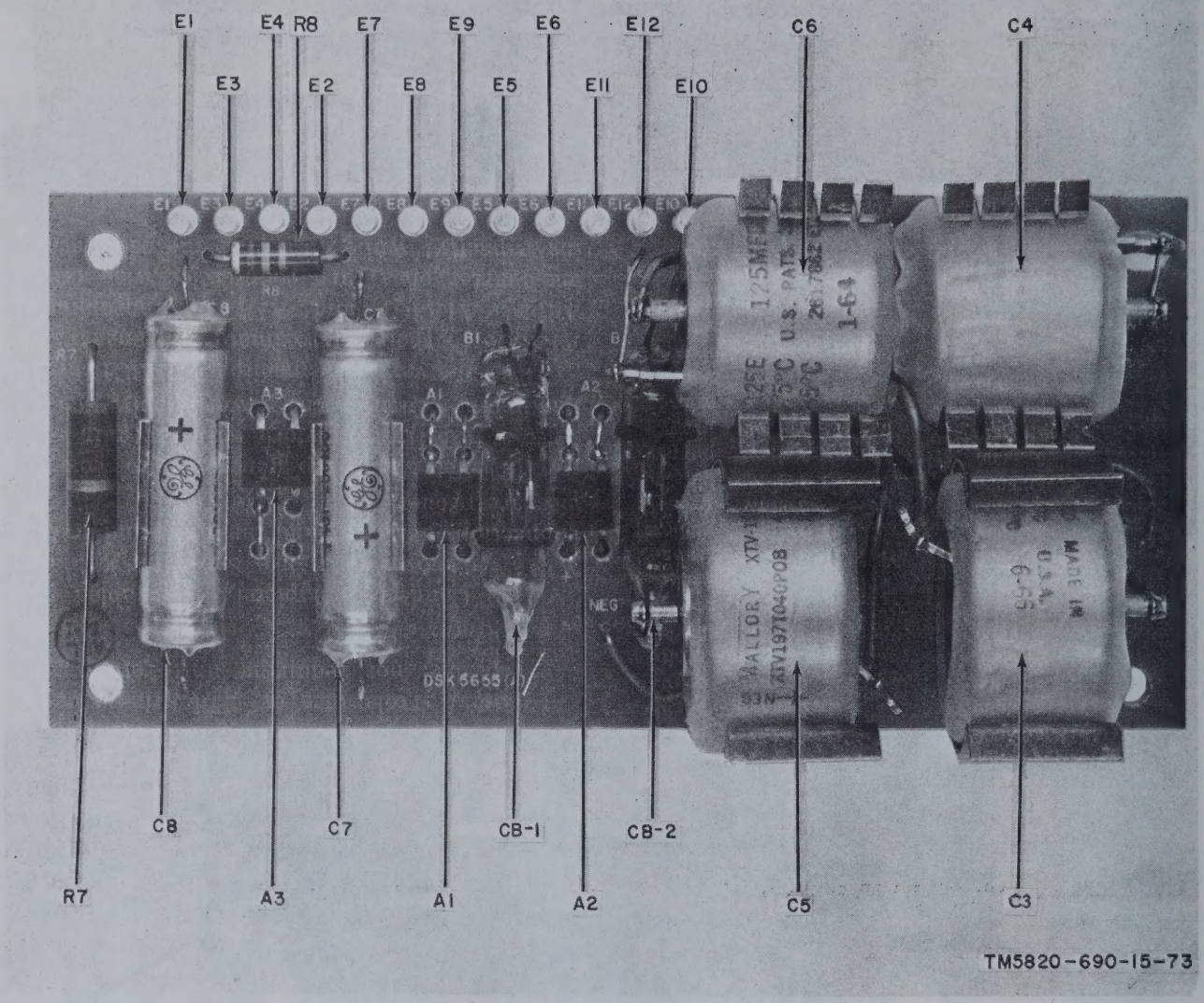

Figure 7-41. Rectifier filter A1A8.

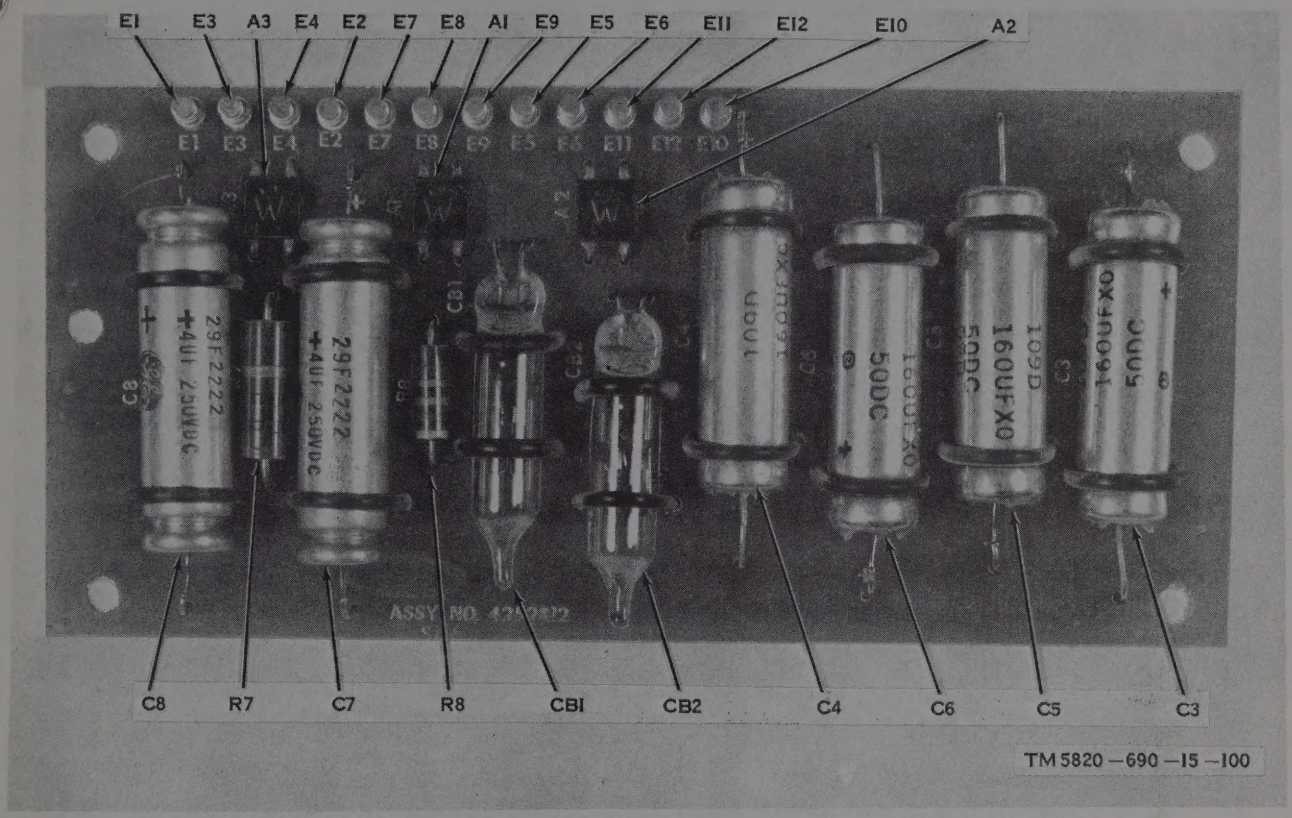

Figure 7-41.1. *Rectifier filter A1A8 R-1421B/URR.*

(3) Remove the four 1/4-inch 6-32 panhead screws from each corner of the board.

(4) Remove the board.

b. Replacement.

(1) Replace the rectifier filter in position along the side of A4 with the four 6-32 1/4-inch Phillips-head screws and lock and flat washers.

(2) Resolder all wires on the board.

(3) Replace back panel A5 (para 7-25).

7-23. 37.5-MHz Local Oscillator Amplifier A1A11 Removal and Replacement

Removal of the 37.5-MHz local oscillator amplifier requires the removal of front panel A2 and preamplifier and band selector A4 (fig. 7-3, 7-4, 7-5, 7-42, 7-43, and 7-44).

a. Removal.

(1) Remove the front panel (para 7-11).

(2) Remove the preamplifier and band selector assembly (para 7-13*b*(1) through (6)).

(3) Tag the wires according to their terminal numbers (A1A11E1 through A1A11E5, A1A11FL1, and A1A11FL2), and unsolder them.

(4) Remove the four 4-40 hex. nuts and washers.

(5) The module can now be removed by raising it and then sliding it out the side of the chassis.

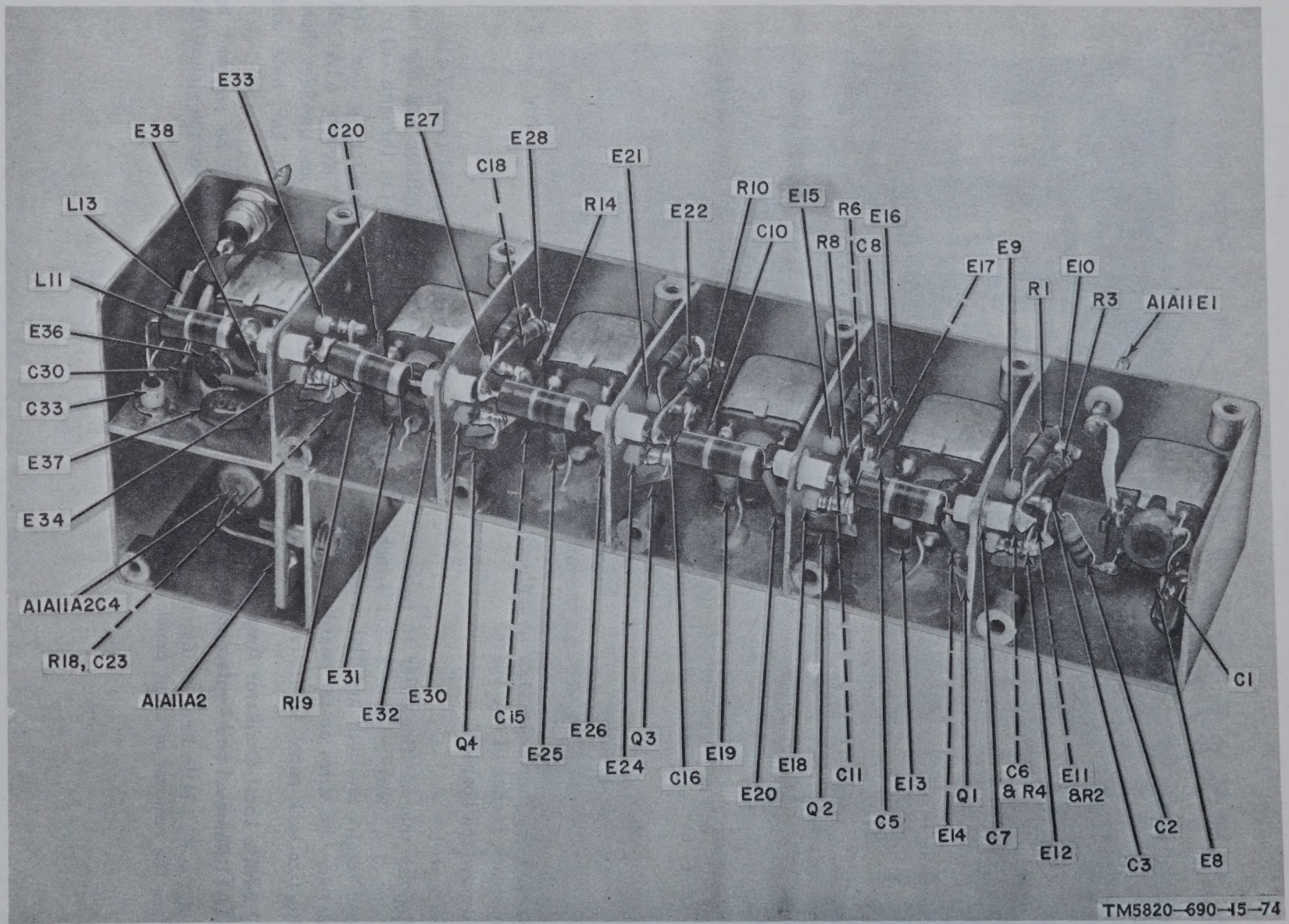

Figure 7-42. 37.5-MHz local oscillator amplifier A1A11A1.

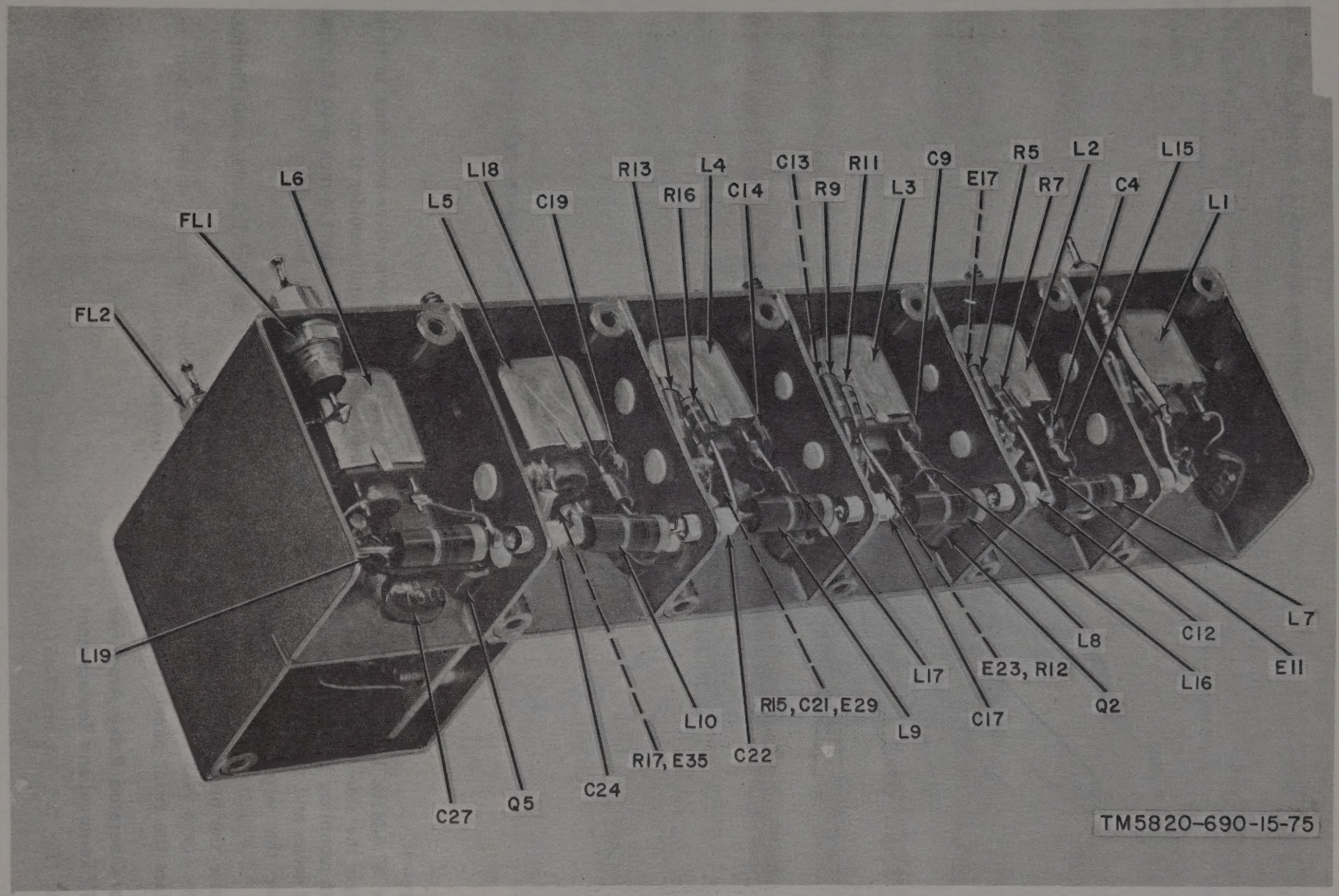

Figure 7-43. 37.5-MHz local oscillator amplifier A1A11A1, tilted view.

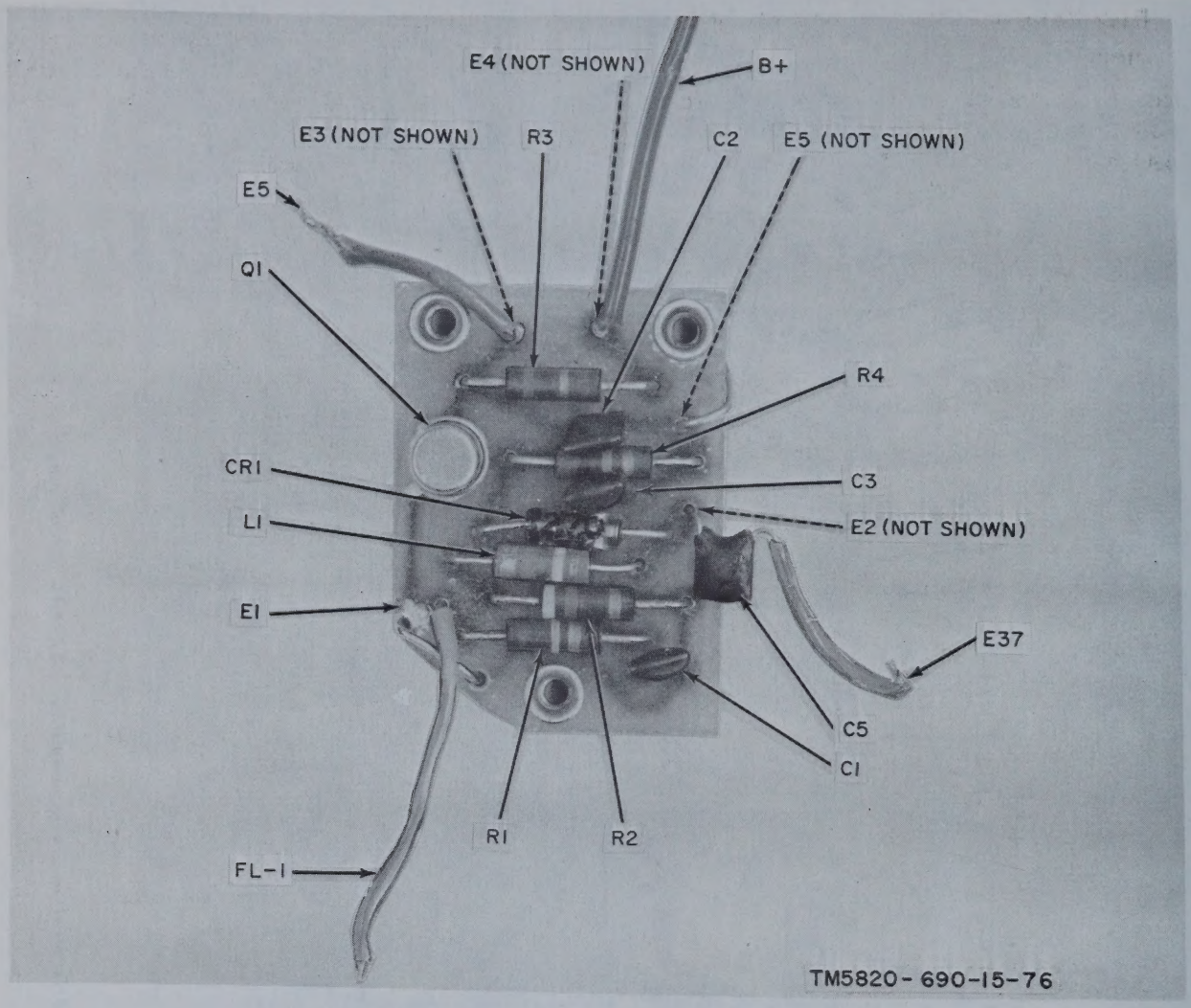

Figure 7-44. 37.5- MHz age A1A11A2.

b. Replacement.

(1) Slide 37.5-MHz local oscillator amplifier in through the side of the main chassis. Align the four mounting holes, and then replace the four split locks and nuts.

(2) Solder the wires to the proper terminals.

(3) Replace the preamplifier and band selector assembly (para 7-13*c*).

(4) Replace the front panel (para 7-11).

7-24. Carrier-Operated Relay Amplifier A1A12 Removal and Replacement

a. Removal (fig. 7-4, 7-5, and 7-45).

(1) Tag the seven wires according to their terminal numbers, and unsolder them.

(2) Remove the four 1/4-inch 4-40 Phillips-head screws from the board.

b. Replacement.

(1) Replace the four 1/4-inch 4-40 Phillips-head screws.

(2) Resolder the seven wires to their respective terminals.

7-25. Back Panel A5 Removal and Replacement

The removal of the back panel (fig. 7-46, 7-47, and 7-48) requires loosening ac power line filter A5A1.

a. Removal.

(1) Loosen A5A1 from the back panel by removing the four 4-40 Phillips-head screws from connector A5J3. Move this unit forward slightly to expose the two 6-32 Phillips-head screws in the main chassis.

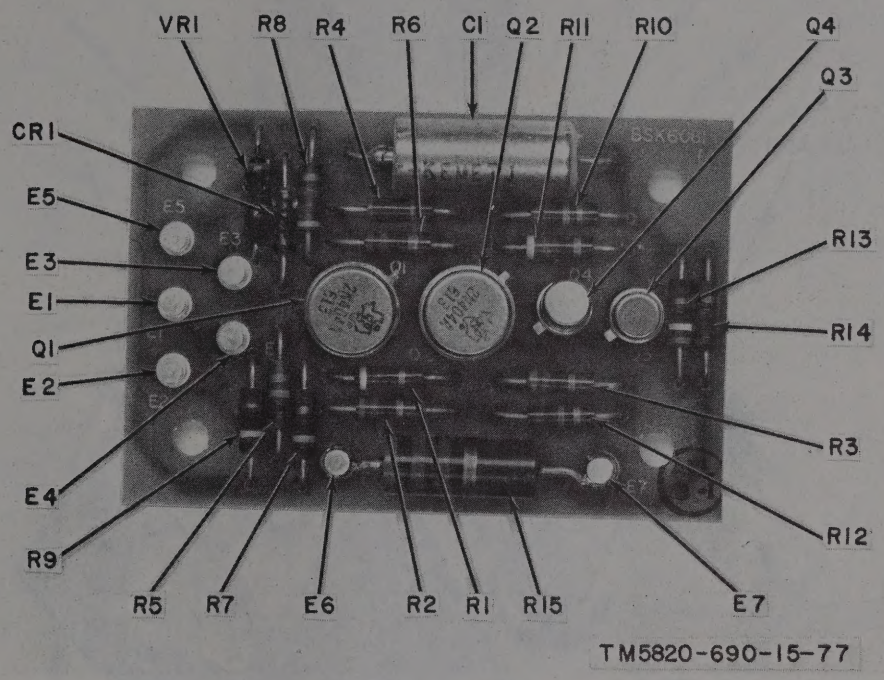

Figure 7-45. Carrier-operated relay amplifier A1A12.

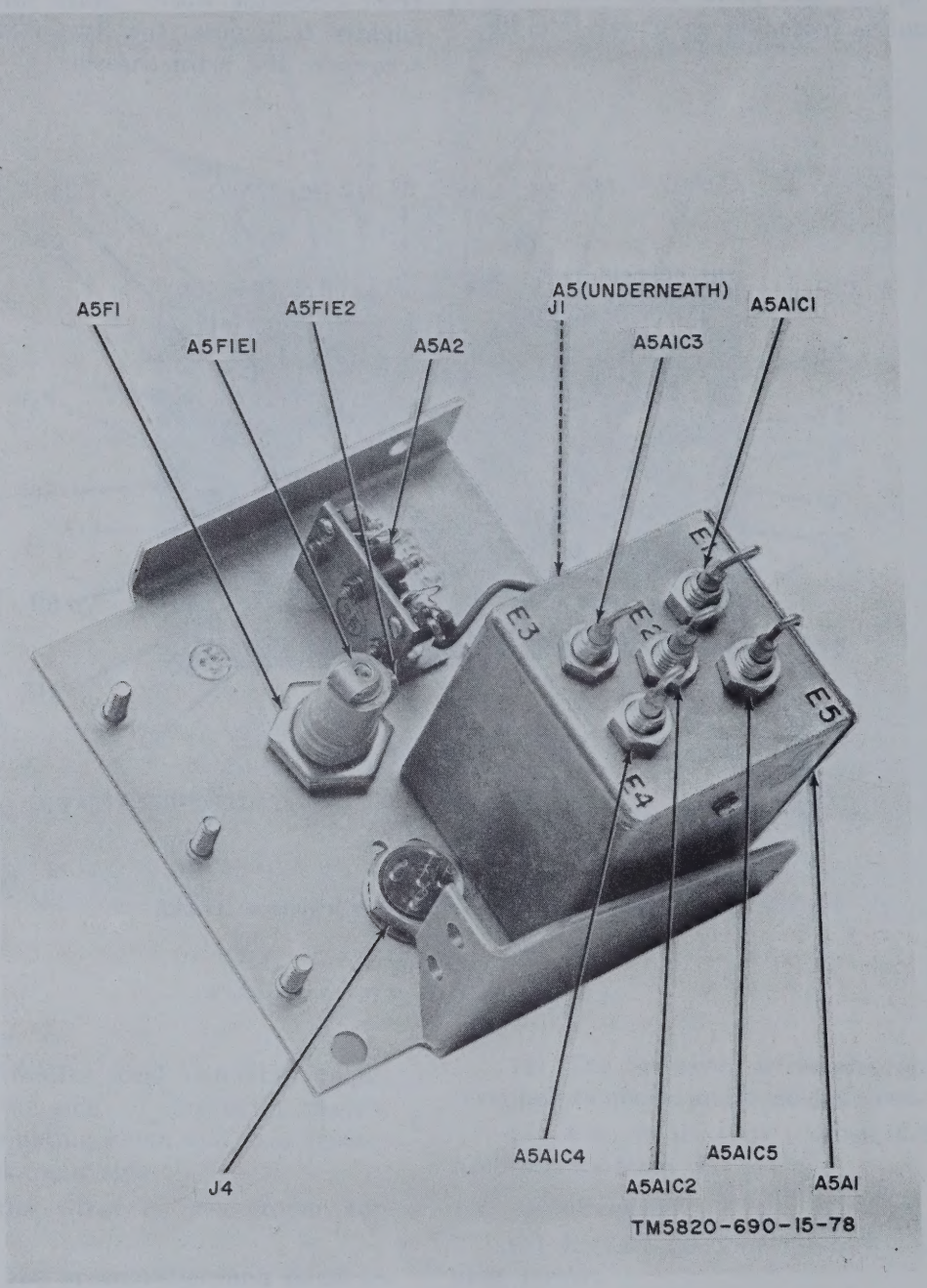

Figure 7-46. Receiver, Radio R-1421A/URR, inside of back panel A5.

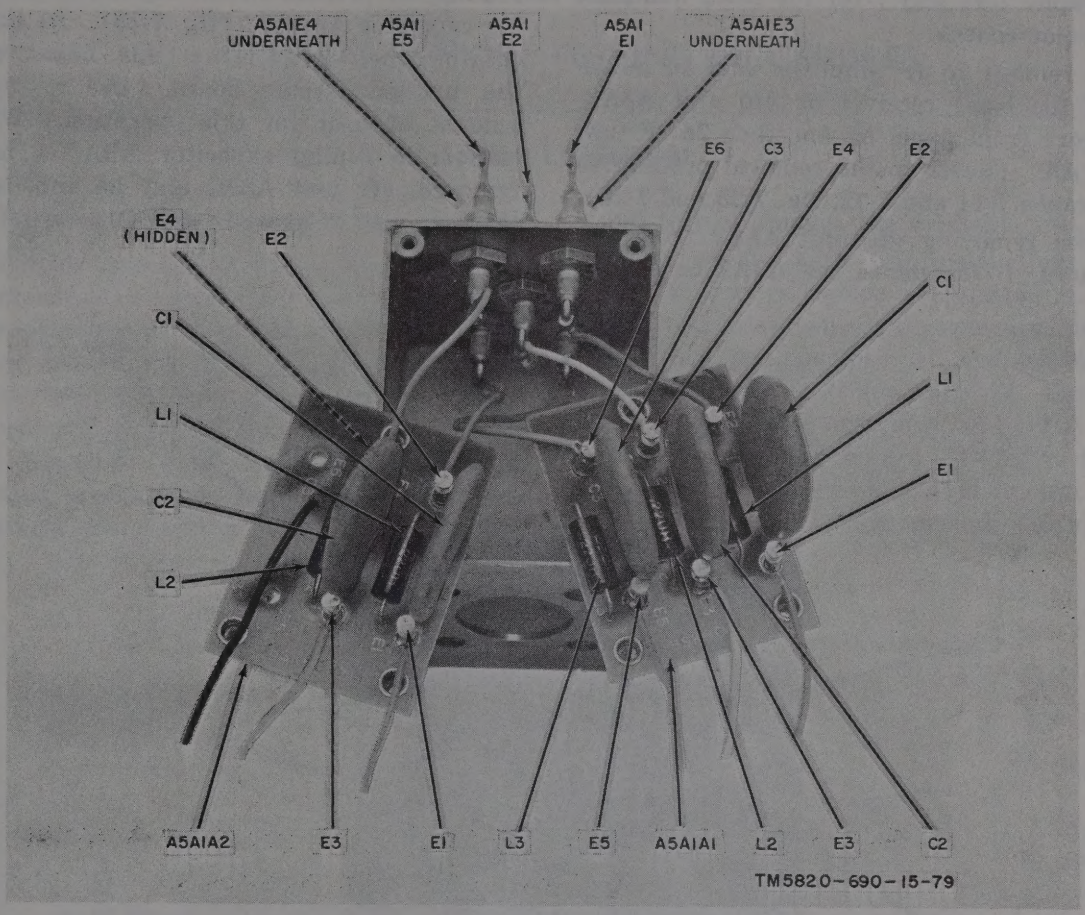

Figure 7-47. Ac power line filter A5A1.

(2) Remove the three screws and three nuts holding the unit in place on main chassis A1 and preamplifier and band selector A4.

(3) Unsolder and tag the wires from main chassis A1 to ac power line filter A5A1 (tag E1 through E5); signal indicating receiver filter A5A2 (tag E1), and fuse F1E2.

b. Replacement.

(1) Solder the wires to their appropriate terminals.

(2) Fasten the back panel to A1 and A4 with the 3/8-inch 6-32 screws and three 6-32 nuts, using lockwashers where required.

(3) Fasten unit A5A1 in place with four 3/8-inch 4/40 Phillips-head screws through connector A5J3.

Section V. REPAIR

7-26. General Parts Replacement Techniques

Some of the modules in the HF receiver can be easily reached and replaced without special procedures. Because of the extreme packaging density, however, several modules require special procedures to remove them. These procedures shall be followed when it becomes necessary to remove the modules.

a. Preamplifier and band selector assembly A4 is not removed for parts replacement or alignment unless mechanical damage to the switch enclosure must be repaired. When removing coil deck rotors, A4S1 (A, B, C, D, E, and F), be careful that the finger contacts are not bent or broken. When replacing coil deck rotors, install the rotors so that the proper coils make contact with the finger contacts (refer

to paragraphs 7-9*h* and 7-10*f* for band numbers and coil color codes).

b. To remove 2d IF amplifier and 3d mixer A3A1 of the basic receiver or vfo unit A3A2, first remove front panel A2 and then 2d IF tuning unit A3. (Refer to the removal procedures in paragraphs 7-11 and 7-12, fig. 7-23 and 7-25).

c. When removing vfo unit A3A2 from the gearbox unit, first remove the A3A2 cover, revealing the printed circuit board and piston tuning capacitor A3A2C1 (fig. 7-26). Be extremely careful when unsoldering this capacitor from the printed circuit board. Use a minimum amount of heat for this operation. When the lead from tuning capacitor A3A2C1 has been removed, vfo unit A3A2 may be unbolted from the rear wall of gearbox A3MP1.

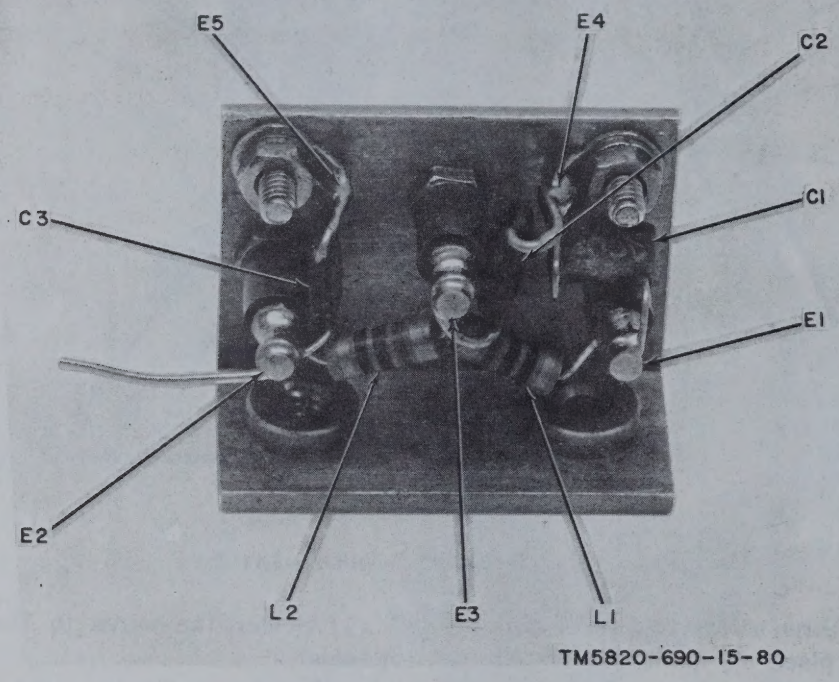

Figure 7-48. Signal indicating receiver filter A5A2.

d. When removing 2d IF amplifier and 3d mixer A3A1, the same general precautions and instructions apply as for the removal of the A3A2 unit.

7-27. Soldering

a. Any soldering should be done with a pencil-type iron of not more than 37½ watts.

b. When soldering transistor leads, solder quickly; where possible, use a heat sink (such as a pair of long-nosed pliers) between the soldered joint and transistor. If transistor leads must be soldered without a heat sink, wait at least 1 minute after soldering before applying power to the HF receiver. Use approximately the same length and dress of transistor leads as were used originally.

CHAPTER 8

GENERAL SUPPORT TESTING PROCEDURES

Section I. GENERAL

8-1. Purpose of Final Testing

a. Testing procedures are prepared for use in maintenance of signal equipment to determine the acceptability of repaired signal equipment. These procedures set forth specific requirements that repaired signal equipment must meet before it is returned to the using organization. The testing procedures may also be used as a guide for testing of equipment that has been repaired at organizational maintenance, if the proper tools and test equipment are available.

b. Comply with the instructions preceding each procedure before performing it. Perform each test in sequence. Do not vary the sequence. For each test, perform all the actions required in the *control settings* columns; then perform each specific test procedure and verify it against its performance standard. Refer to the following figures for terminals, adjustments, and alignment components: 7-2 through 7-6 and 8-1.

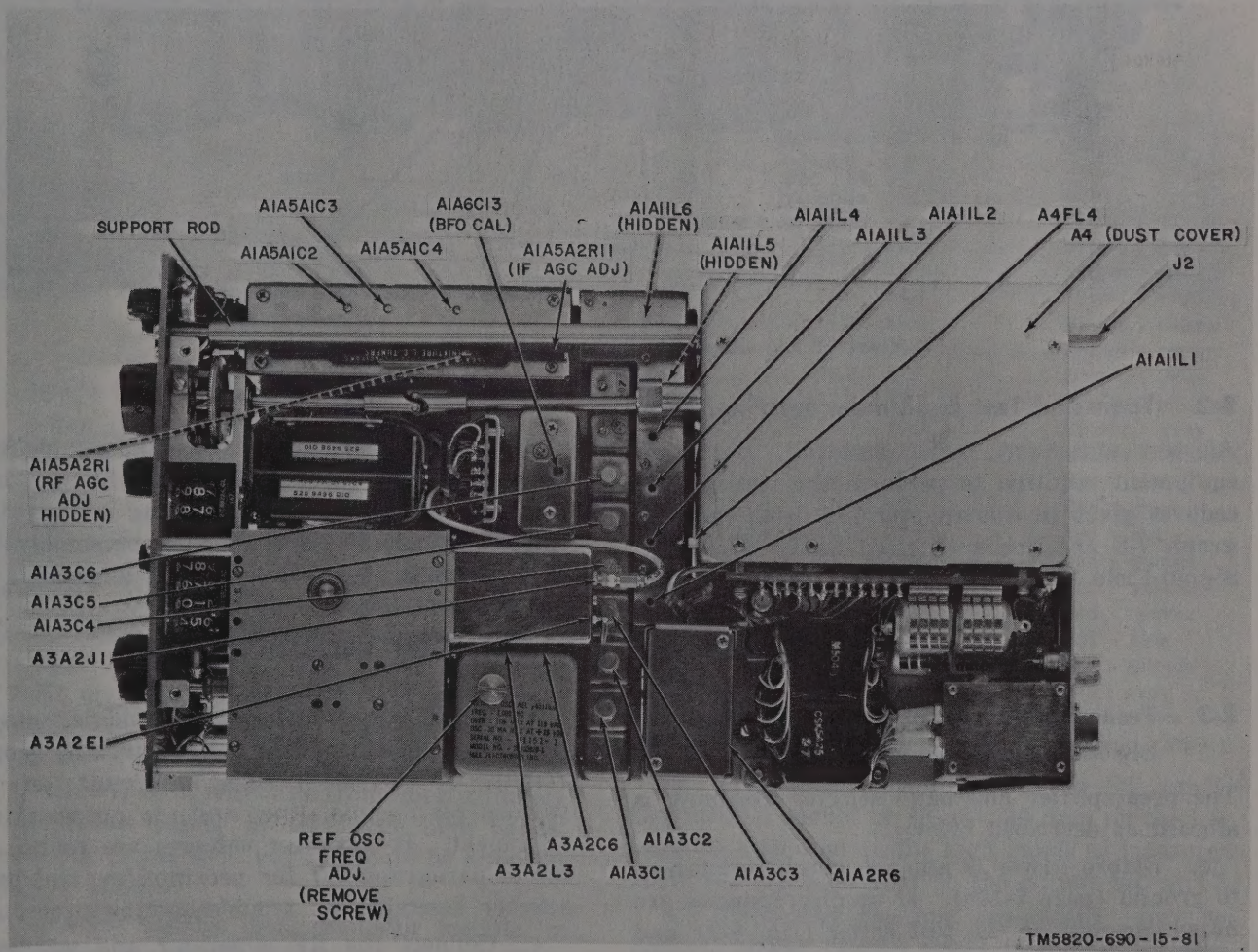

Figure 8-1. *Receiver, Radio R-1421A/URR, top view.*

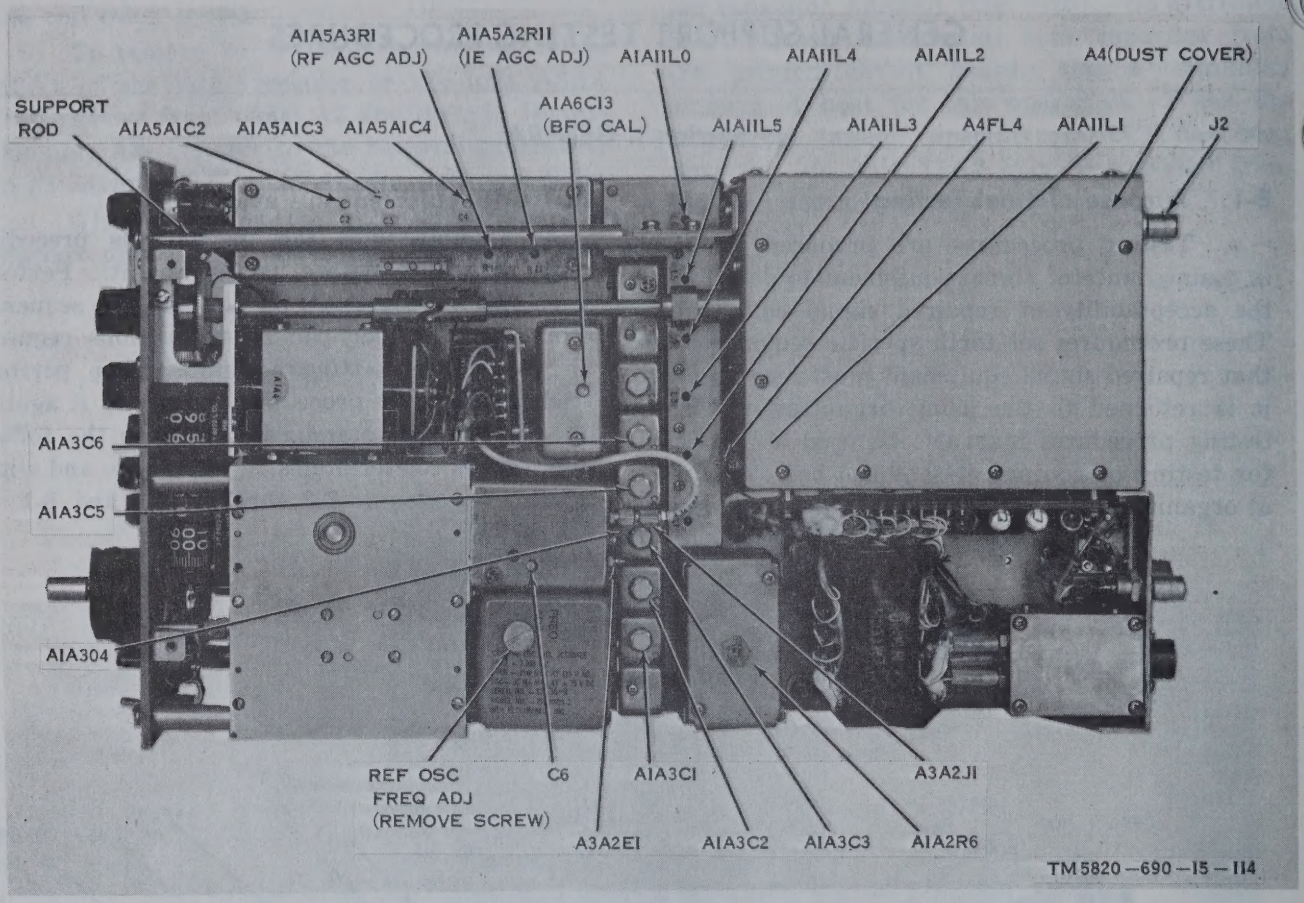

Figure 8-1.1. *Receiver, Radio R-1421B/URR, top view.*

8-2. Tools and Test Equipment for Final Test

All test equipment, tools, material, and other equipment required to perform the testing procedures given in this chapter are listed in paragraph 7-3 and are authorized under TA 11-17, Signal Field Maintenance Shops, and TA-100 (11-17), Allowances of Signal Corps Expendable Supplies for Signal Field Maintenance Shop, Continental United States. Final testing is comprised of two categories of operation: subassembly test and alignment, and receiver final alignment.

Section II. SUBASSEMBLY TEST AND ALIGNMENT PROCEDURES

8-3. Preamplifier and Band Selector Assembly A4, Alignment Procedure

The preamplifier and band selector assembly is aligned as described below:

a. Before power is applied, check resistances to ground (para 7-10*e*). If no discrepancies are noted, proceed to the test setup (fig. 8-2) and application of power (*b* below). If troubles are noted in resistance readings, refer to paragraph 7-7, preamplifier and band selector assembly, troubleshooting procedure.

b. Apply power, and check ac and dc voltages in RF amplifier module A4A2 circuitry (para 7-10*e*). If correct voltages are found on the various test points, the unit is prepared for alignment. If incorrect voltages are found, refer to paragraph 7-7 for preamplifier and band selector assembly A4 troubleshooting procedure.

c. Connect the RF generator and voltmeter with an RF probe as shown in figure 8-2. A signal input level of -50 dbm (700 μv) from the RF generator should be sufficient. A voltage stepup of 10 to 15 db should be noted from the

RF generator to the grid of tube A4V1, pin 4, using the voltmeter with the high impedance probe. Refer to the schematic diagram in figure 6-23.

d. Remove the input signal at J2. If the output signal persists, the stage is oscillating; tubes V1 and V2 should be checked to be sure that they are seated properly in their sockets. If the oscillations persist, refer to troubleshooting procedures for preamplifier and band selector assembly A4.

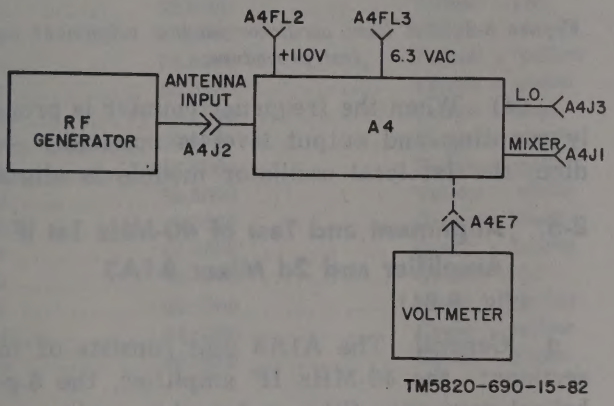

Figure 8-2. Preamplifier and band selector assembly alignment test setup.

CAUTION

Before tuning cemented inductor cores, loosen cement with a suitable solvent. Cement the inductor cores after alignment.

e. To align the RF amplifier module, set input tuning capacitor C1 (antenna trim) to one-half mesh. Remove tube V2, and measure the output voltage of V1 with the RF generator at the center of the band being tuned (1.5 MHz, 2.5 MHz, etc), and reconnect the RF generator to J2; tune the grid coils on rotors A4S1A and A4S1B for a maximum output at the cathode of V2 (*l* below). Gain will vary from approximately 30 db on low bands to 20 db on high bands. Bandwidth at the 3-db points should be approximately 1 MHz.

f. Disable the 1st local oscillator module by unsoldering the +22.5-volt power lead at filter A4FL4.

g. Monitor the RF output of V2 by placing the voltmeter probe at terminal A4E7 of the plate stator contact.

h. Set output tuning capacitor C2 to one-half mesh by setting the KC TUNING control to 500 kHz.

i. Replace tube V2, and allow sufficient warmup time (30 seconds to 1 minute).

j. Tune the plate coils on rotors A4S1C and A4S1D for maximum signal (*l* below). At this time, the grid coils on A4S1 (A and B) may require repeaking slightly.

k. The gain and 3-db bandwidth should be close to those indicated in paragraph 7-10*d*.

l. Grid Preamplifier and Plate Coils.

Band	*Frequency range (MHz)*	*Color code*
1	1.0 - 2.0	Brown
2	2.0 - 3.0	Red
3	3.0 - 4.0	Orange
4	4.0 - 5.0	Yellow
5	5.0 - 6.0	Green
6	6.0 - 7.0	Blue
7	7.0 - 8.0	Purple
8	8.0 - 9.0	Gray
9	9.0 - 10.0	White
10	10.0 - 11.0	Black
11	11.0 - 12.0	Brown - brown
12	12.0 - 13.0	Brown - red
13	13.0 - 14.0	Brown - orange
14	14.0 - 15.0	Brown - yellow
15	15.0 - 16.0	Brown - green
16	16.0 - 17.0	Brown - blue
17	17.0 - 18.0	Brown - purple
18	18.0 - 19.0	Brown - gray
19	19.0 - 20.0	Brown - white
20	20.0 - 21.0	Red - black
21	21.0 - 22.0	Red - brown
22	22.0 - 23.0	Red - red
23	23.0 - 24.0	Red - orange
24	24.0 - 25.0	Red - yellow
25	25.0 - 26.0	Red - green
26	26.0 - 27.0	Red - blue
27	27.0 - 28.0	Red - purple
28	28.0 - 29.0	Red - gray
29	29.0 - 30.0	Red - white
30	30.0 - 31.0	Orange - black

m. The overall power gain at the RF amplifier module should be from +30 dbm on the low band to +20 dbm on the high bands as measured from the RF generator to the output tap at C2.

n. Disconnect the test equipment, and reconnect power (+22.5 volts) to the 1st local oscillator module at A4FL4.

8-4. 1st Local Oscillator Module A4A4 Alignment and Test Procedure

CAUTION

Inductor cores have been cemented in place with polystyrene cement. Before attempting any retuning, soften the cement with clorothene or any other suitable solvent. Cement the cores again after alignment. Cores fracture easily; use only an alignment tool to tune cores.

a. Preliminary.

(1) Check to see if +22.5-volt power line is connected to filter A4FL4. If not, resolder this power line. Set up test equipment as shown in figure 8-3.

(2) Disconnect RF cable A4J3.

(3) Apply power to the HF receiver.

b. Alignment and Test.

(1) Connect a frequency counter to A4J1. The frequency counter should indicate some frequency in the range of 41.5 to 70.5 MHz. If the frequency counter does not count or counts some frequency outside this range, remove the rotor and clean it, using alcohol, and check the contacts.

(2) Measure the output power of the 1st local oscillator module at A4J3; see schematic diagrams in figures 6-5, 6-7, and 6-8. The output power from this point should be approximately +10 dbm (0.8 volt) on all bands. If the output from the oscillator is low or absent altogether, refer to the preamplifier and band selector assembly troubleshooting procedure (para 7-7).

(3) Set the MC TUNING control to band 1. (See para 8-5*b*. for color codes and frequencies of 1st local oscillator coils.) Insert an alignment tool, and tune the coil to the proper frequency. Repeat this procedure until all bands have been tuned. Final alignment frequencies should be within ±30 kHz of those indicated in paragraph 8-5*b*.

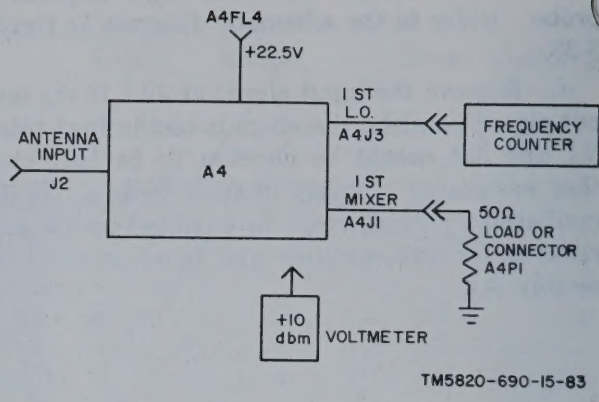

Figure 8-3. 1st local oscillator module alignment and test procedure.

(4) When the frequency counter is properly counting and output level is nominally +10 dbm, the 1st local oscillator module is aligned.

8-5. Alignment and Test of 40-MHz 1st IF Amplifier and 2d Mixer A1A3

(fig. 6-24)

a. General. The A1A3 unit consists of four sections: the 40-MHz IF amplifier, the 6-pole helical resonator filter, a transistor mixer, and the 2d IF bandpass filter. Input power is +22.5 volts and approximately 5 ma. Input and output impedance is nominally 50 ohms. The 40-MHz IF amplifier has a gain of 20 db; the filter, a loss of 10 db to 20 db; and the mixer, a conversion gain of 10 db, which give the unit a nominal 10- to 20-db conversion gain. The 3-db bandwidth is normally 1.1 to 1.3 MHz centered about 40 MHz with a 1.5-db maximum bandpass ripple, and from 30 to 36 db attenuation at double the 3-db bandwidth. Maximum input into the 40-MHz IF amplifier is 5 mv. The local oscillator input into the mixer is nominally 0.23 volt at a frequency of 37.5 MHz. This unit is followed by the 2- to 3-MHz bandpass filter having an insertion loss of up to 16 db depending on the matching network.

b. 1st Local Oscillator Coil Frequency Settings.

Band	Oscillator frequency (MHz)	Color code
1	41.5000	Orange - brown
2	42.5000	Orange - red
3	43.5000	Orange - orange
4	44.5000	Orange - yellow
5	45.5000	Orange - green
6	46.5000	Orange - blue
7	47.5000	Orange - purple
8	48.5000	Orange - gray
9	49.5000	Orange - white
10	50.5000	Yellow - black
11	51.5000	Yellow - brown
12	52.5000	Yellow - red
13	53.5000	Yellow - orange
14	54.5000	Yellow - yellow
15	55.5000	Yellow - green
16	56.5000	Yellow - blue
17	57.5000	Yellow - purple
18	58.5000	Yellow - gray
19	59.5000	Yellow - white
20	60.5000	Green - black
21	61.5000	Green - brown
22	62.5000	Green - red
23	63.5000	Green - orange
24	64.5000	Green - yellow
25	65.5000	Green - green
26	66.5000	Green - blue
27	67.5000	Green - purple
28	68.5000	Green - gray
29	69.5000	Green - white
30	70.5000	Blue - black

NOTE

The oscillator should be set to nominal frequency ±30 kHz. For test purposes, a tolerance of ±75 kHz is acceptable, not requiring unit retuning.

c. Alignment.

(1) Connect completely assembled unit A1A3 as shown in figure 8-4. Check that all connections are right and the levels and frequencies are proper.

(2) Set the sweep generator to cover at least a 10-MHz bandwidth with the gain set at maximum. Turn on the power supply.

(3) Set variable capacitors A1A3C1 through A1A3C6 to their approximate midrange values. Adjust A1A3C1 and A1A3C6 approximately one-quarter of a turn counterclockwise (reducing capacity) while observing the oscilloscope.

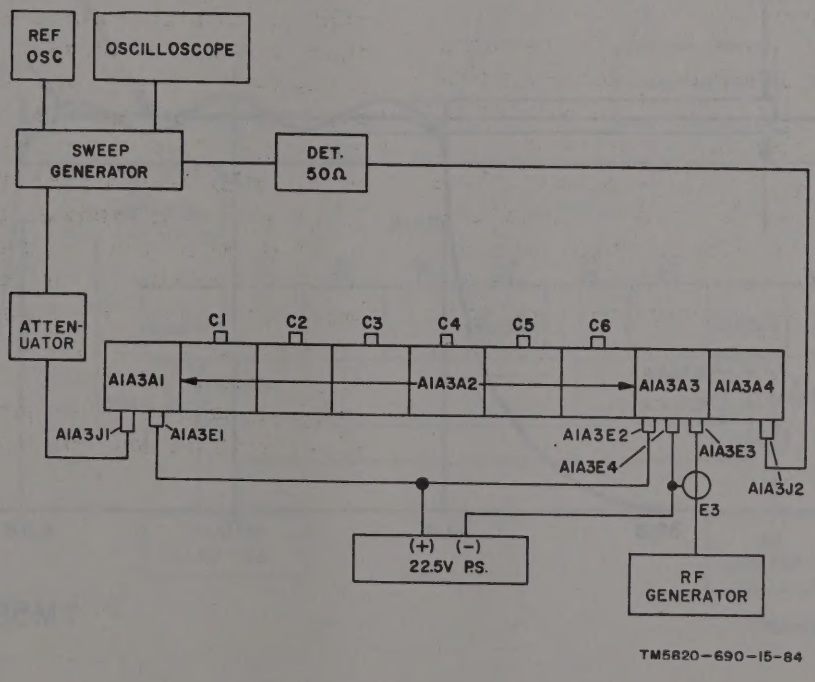

Figure 8-4. 1st IF amplifier and 2d mixer test alignment setup.

(4) A distorted bandpass pattern should be seen; if not, check the unit for bad connections, misaligned coils, a bad variable capacitor, a bad amplifier, or a bad mixer (fig. 8-5).

d. Preliminary Procedure. To check the mixer and the 40-MHz amplifier, remove the bottom plate. Tack-solder a coaxial cable on A1A3A3E2 and the ground shield to the inside of the can. Refer to the schematic diagram, figure 6-24.

e. Amplifier-Filter Test.

(1) To check the 40-MHz amplifier, feed 40 MHz at a 5-mw level into IF input cable A1A3J1 and measure the output of the coaxial cable (added in *d* above) with a high impedance probe and the voltmeter.

(2) The gain should be 5 to 20 db; this depends on the alignment of the filter and may be changed by varying A1A3C6 slightly to adjust for detuning of this pole by the added load.

f. Mixer Test. To check the mixer, put 37.5 MHz at 0 dbm (0.22 volt) into A1A3E3 and 40 MHz at 14 mv into the coaxial cable (*d* above). Check the output on an oscilloscope with a 50-ohm load on the output of 2- to 3-MHz filter A1A3J2. The signal should be 2.5 MHz. Remove the oscilloscope, leaving the 50-ohm load connected; with the high impedance voltmeter, measure the 40-MHz signal into the mixer and the 2.5-MHz output. Conversion gain should be 0 to 6 db. Adjust the gain and sweep width of the sweep generator as needed. Note the center of the bandpass pattern; if it is not at 40 MHz, adjust C1 to C6 sequentially and in small increments to move the bandpass center to 40 MHz. Adjust C1 through C6 to get the best bandpass pattern with a center frequency of 40 MHz, a 3-db bandwidth of 1.2 to 1.3 MHz, and a double 3-db bandwidth attenuation of at least 30 db. The use of 1-MHz markers on the sweep generator and a switchable 3-db pad on the output of the sweep generator will help set up the bandpass frequencies.

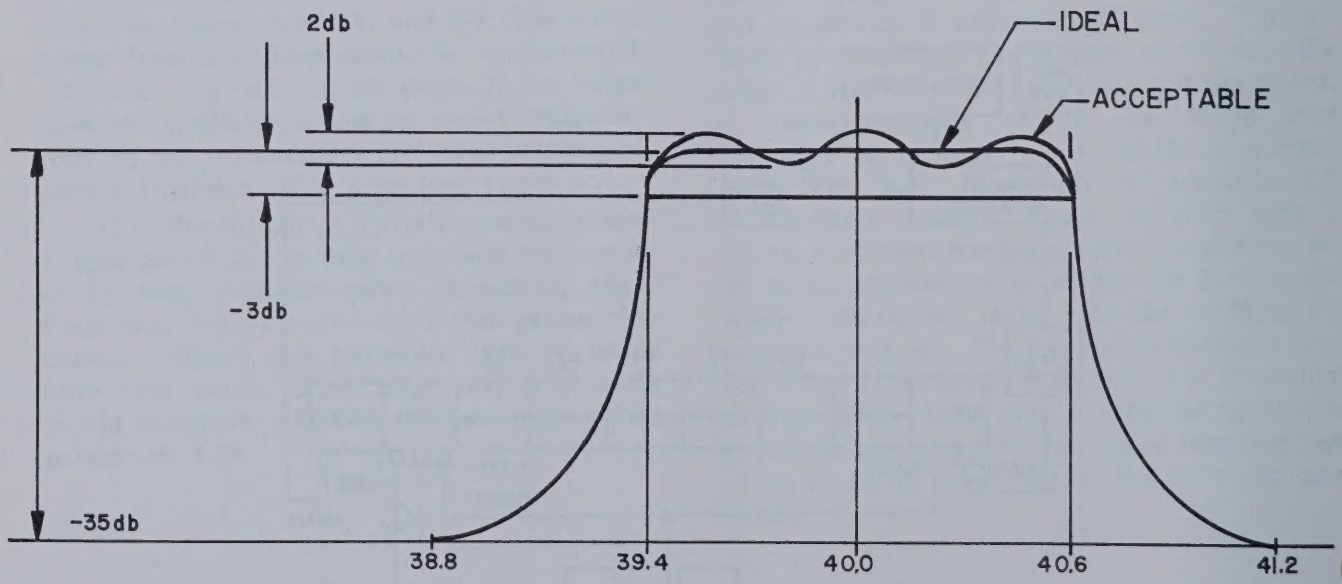

Figure 8-5. 40-MHz IF response sweep pattern.

g. Measurement. The measurements are made by changing the test setup to that shown in figure 8-6. An RF generator with a variable attenuator is connected to A1A3J1 and a 50-ohm input impedance voltmeter to A1A3J2. Measure the 3-db bandwidth with a frequency counter. Add this bandwidth to the center frequency, and set the signal generator to this combined frequency; note how many db down the output signal is from the center frequency. Subtract the 3-db bandwidth from the center frequency, and note the attenuation as before. This output level at double the bandwidth should be 33 db down from the center frequency; if it is not, realign the mixer. If the gain is substantially off (5 to 10 db low) and filter rolloff is not good, check for misalignment of one pole, poor connections, a broken cable, or an improper connection.

8-6. Alignment and Test of 1-MHz Crystal Reference Oscillator A1A10

a. Preparatory. Connect the power supply and test equipment to the terminals on the bottom of the assembly as follows (fig. 8-1 and 8-7):

(1) Terminal 1: common or ground.
(2) Terminal 2: +22.5 volts dc.
(3) Terminal 3: 560-ohm, 1/2-watt resistor to ground, oscilloscope or frequency counter or voltmeter as required.
(4) Terminal 4: common or ground.
(5) Terminal 5: common or ground.
(6) Terminal 6: common or ground.
(7) Terminal 7: no connection.
(8) Terminal 8: 117 volts 50 to 400 Hz ac.
(9) Terminal 9: 117 volts 50 to 400 Hz ac retune.
(10) Terminal 10: no connection.
(11) Terminal 11: no connection.

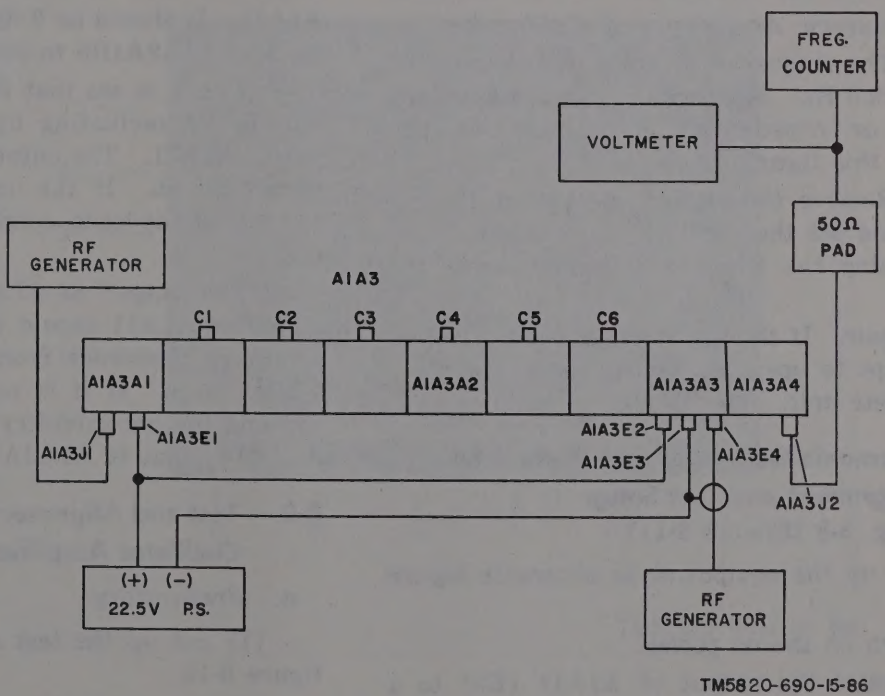

Figure 8-6. 40-MHz 1st IF and 2d mixer power measurement.

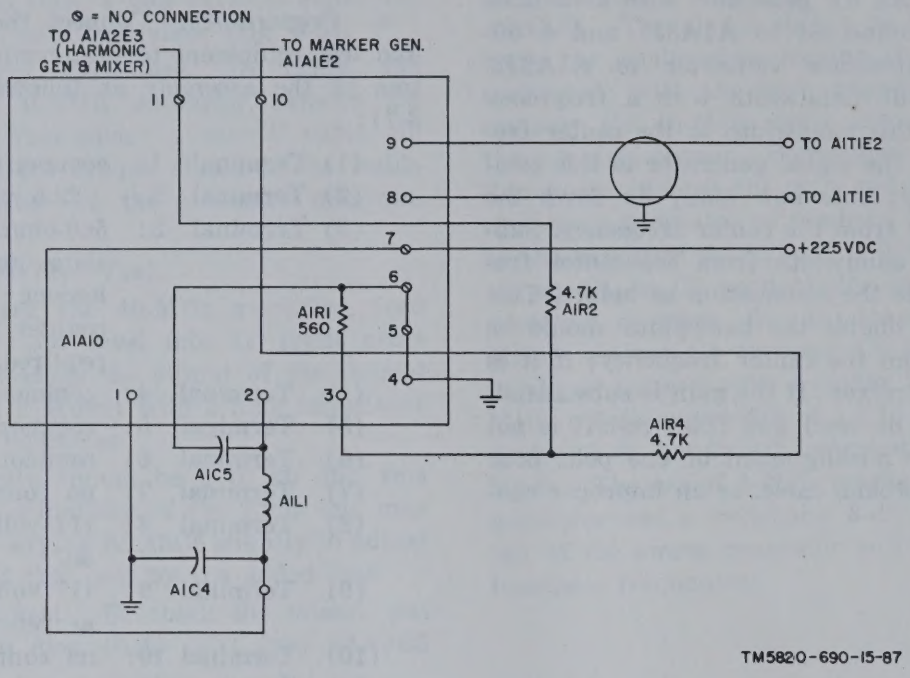

Figure 8-7. Reference oscillator.

b. Output Voltage. The output voltage should be at least 0.5 volt rms across the 560-ohm load.

c. Frequency Accuracy and Calibration.

(1) The frequency of the output should be 1 MHz, ±0.5 Hz. Measure it against a standard frequency or frequency counter with an accuracy exceeding this figure.

(2) Remove the cap on the top of the assembly, and set the oscillator to a nominal frequency using the trimmer capacitor inside the module.

d. Repair. If the oscillator is inoperative, do not attempt to open the sealed header; replace the complete unit.

8-7. Harmonic Generator and Mixer A1A2 Alignment and Test Setup

(fig. 8-8 through 8-11)

a. Set up the equipment as shown in figure 8-11.

b. Turn on the dc power.

c. Connect the output of A1A11 (E3) to a voltmeter with a 50-ohm load (a properly aligned A1A11). With the signal into A1A2J1 set at 70.5 MHz and a +10-dbm output, measure the output of 37.5-MHz local oscillator amplifier A1A11. It should be 0 dbm. If it is not, adjust resistor A1A2A1R6 to obtain the level.

d. Check to see that the test setup or A1A11 unit is not oscillating by disconnecting the input to A1A11. The output should drop approximately 60 db. If the unit is oscillating, check and adjust the leads, connections, and wire dressing.

e. The output of 37.5-MHz local oscillator amplifier A1A11 should remain constant ±3 db for every frequency from 40.5 to 70.5 MHz in 1-MHz steps. If it is not, check the 37.5-MHz agc and the agc circuitry in spectrum generator A1A2A1 (that is A1A2A1CR1).

8-8. Test and Alignment of 37.5-MHz Local Oscillator Amplifier A1A11

a. Preparatory.

(1) Set up the test equipment as shown in figure 8-12.

(2) Connect and turn on power.

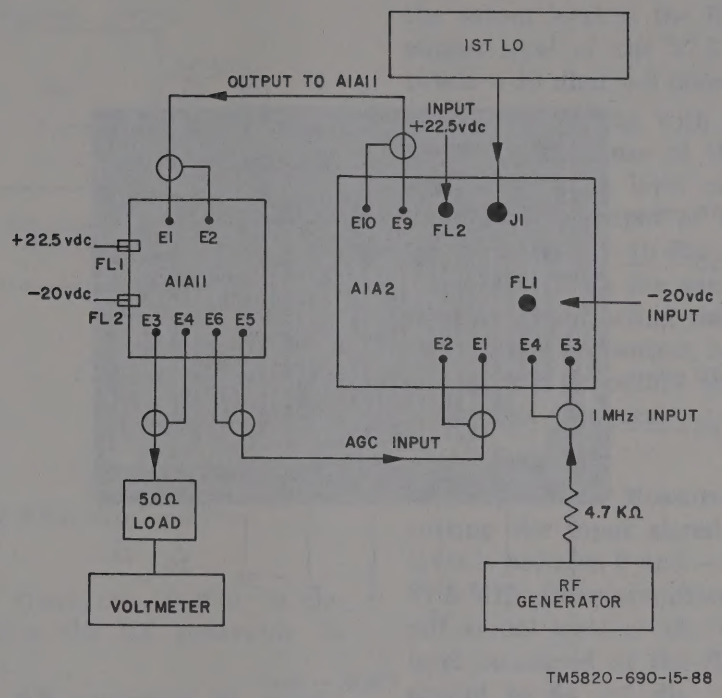

Figure 8-8. Harmonic generator and mixer alignment and test setup.

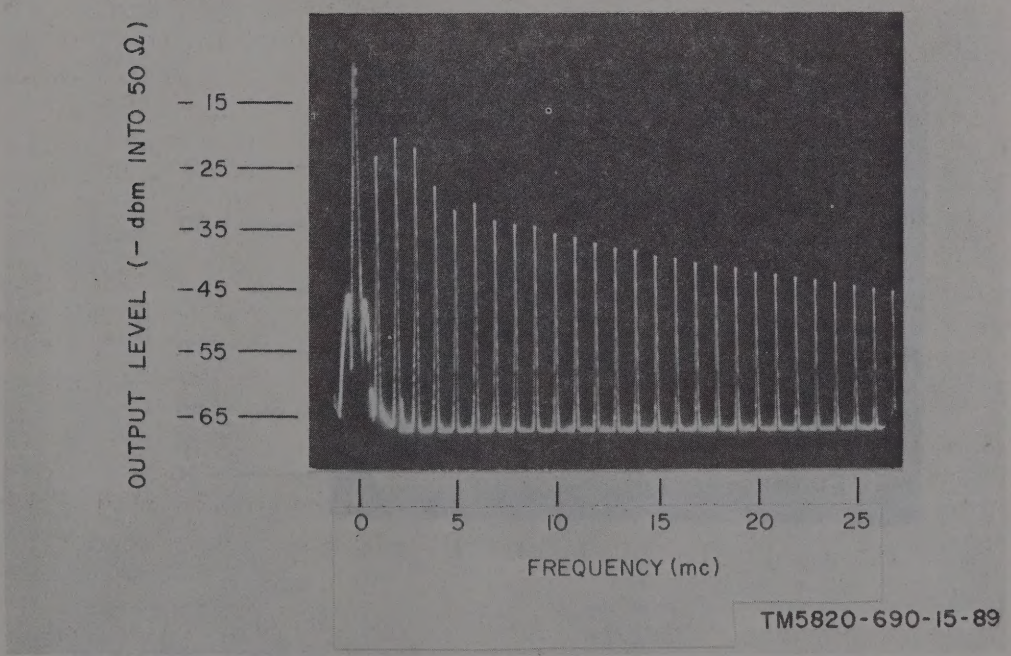

Figure 8-9. Harmonic generator output.

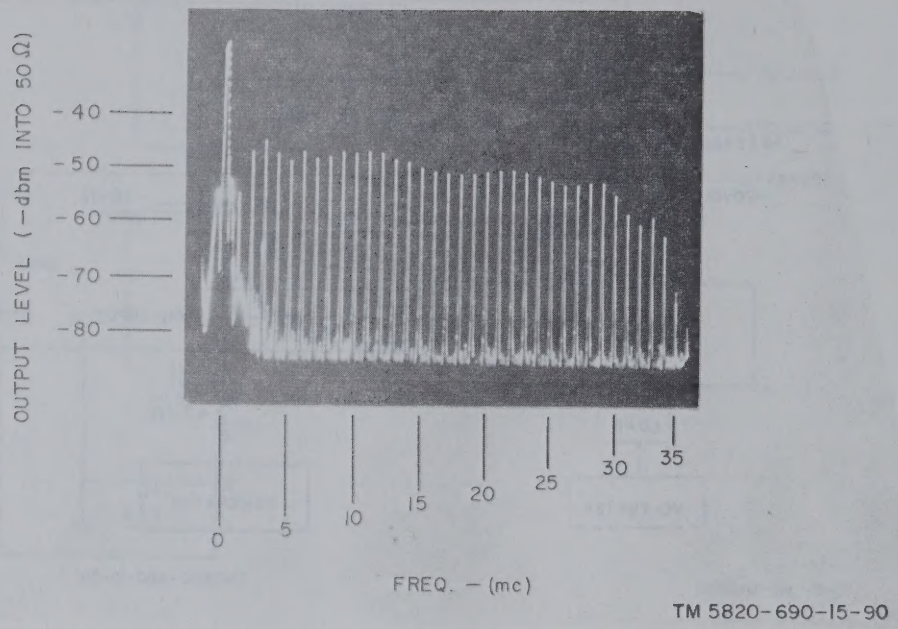

Figure 8-10. 4- to 34-MHz filter output.

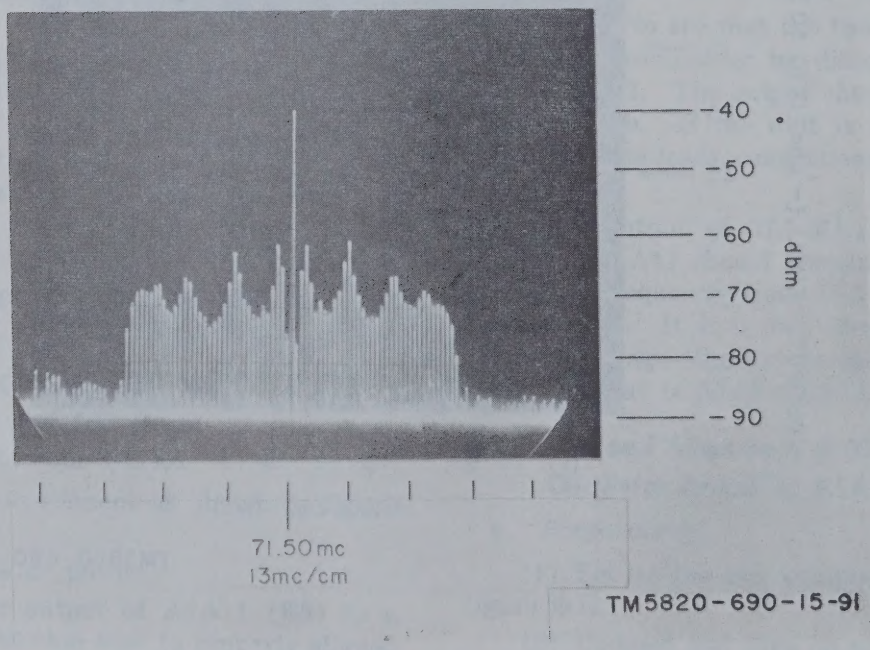

Figure 8-11. Harmonic mixer output.

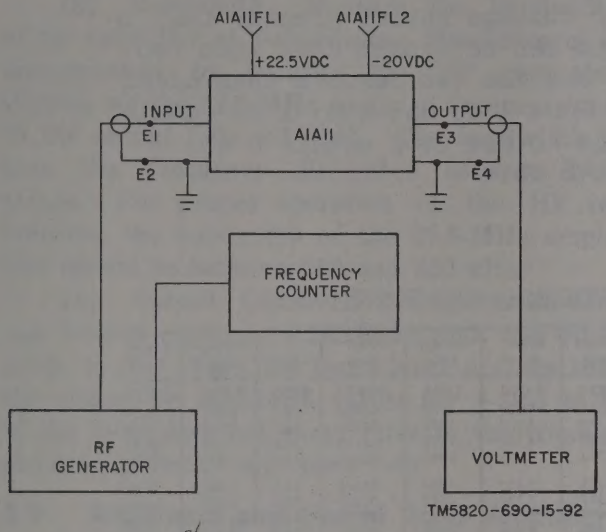

Figure 8-12. 37.5-MHz filter amplifier.

b. Alignment.

(1) Connect the frequency counter to the RF generator, and tune the RF generator to 37.500 MHz ±10 kHz.

(2) Connect the RF generator by coaxial cable to input E1, center conductor E2 ground. Connect the 50-ohm probe of the voltmeter to output terminal E3 (ground at E4). Adjust the output level of the RF generator so that the output level of the 37.5-MHz amplifier is between −10 dbm +0 dbm.

(3) Starting with the first coil, tune for maximum response at the voltmeter, and readjust the output level of the RF generator to maintain the output of the 37.5-MHz filter amplifier between −10 dbm and 0 dbm, as necessary. Tune coil L2 in the same way for a maximum response, readjusting the input level as required to maintain the output between −10 and 0 dbm. Repeat this procedure with coils L3, L4, L5, and L6 in this sequence.

c. Test.

(1) *Gain.* Measure amplifier gain by adjusting the input signal levels until the output level is between 0 and −10 dbm. The gain of the 37.5-MHz filter amplifier is the ratio of the output signal level of the voltmeter and the input level measured at the RF generator. The gain should be 64 ±5 db. (Refer to table 8-1 relating db gain and voltage ratios.)

(2) Decibels vs. voltage and power. Table 8-1 below indicates db for any ratio of voltage or power up to 100 db. For voltage ratios greater than 10 (or power ratios greater than 100), the ratio can be broken down into two products, the db found for each separately, and the two results then added. For example: to convert a voltage ratio of 200: 1 to db: 200: 1 VR equals the product of 100: 1 and 2: 1; 100: 1 equals 40 db; 2: 1 equals 6 db; therefore, 200: 1 VR equals 40 db +6 db, or 46 db.

TABLE 8-1. DECIBELS VS. VOLTAGE AND POWER

Voltage Ratio	Power Ratio	-db +	Voltage Ratio	Power Ratio	Voltage Ratio	Power Ratio	-db +	Voltage Ratio	Power Ratio	Voltage Ratio	Power Ratio	-db +	Voltage Ratio	Power Ratio
1.0000	1.0000	0	1.000	1.000	.4467	.1995	7.0	2.239	5.012	.1995	.03981	14.0	5.012	25.12
.9886	.9772	.1	1.012	1.023	.4416	.1950	7.1	2.265	5.129	.1972	.03890	14.1	5.070	25.70
.9772	.9550	.2	1.023	1.047	.4365	.1905	7.2	2.291	5.248	.1950	.03802	14.2	5.129	26.30
.9661	.9333	.3	1.035	1.072	.4315	.1862	7.3	2.317	5.370	.1928	.03715	14.3	5.188	26.92
.9550	.9120	.4	1.047	1.096	.4266	.1820	7.4	2.344	5.495	.1905	.03631	14.4	5.248	27.54
.9441	.8913	.5	1.059	1.122	.4217	.1778	7.5	2.371	5.623	.1884	.03548	14.5	5.309	28.18
.9333	.8710	.6	1.072	1.148	.4169	.1738	7.6	2.399	5.754	.1862	.03467	14.6	5.370	28.84
.9226	.8511	.7	1.084	1.175	.4121	.1698	7.7	2.427	5.888	.1841	.03388	14.7	5.433	29.51
.9120	.8318	.8	1.096	1.202	.4074	.1660	7.8	2.455	6.026	.1820	.03311	14.8	5.495	30.20
.9016	.8128	.9	1.109	1.230	.4027	.1622	7.9	2.483	6.166	.1799	.03236	14.9	5.559	30.90
.8913	.7943	1.0	1.122	1.259	.3981	.1585	8.0	2.512	6.310	.1778	.03162	15.0	5.623	31.62
.8810	.7762	1.1	1.135	1.288	.3936	.1549	8.1	2.541	6.457	.1758	.03090	15.1	5.689	32.36
.8710	.7586	1.2	1.148	1.318	.3890	.1514	8.2	2.570	6.607	.1738	.03020	15.2	5.754	33.11
.8610	.7413	1.3	1.161	1.349	.3846	.1479	8.3	2.600	6.761	.1718	.02951	15.3	5.821	33.88
.8511	.7244	1.4	1.175	1.380	.3802	.1445	8.4	2.630	6.918	.1698	.02884	15.4	5.888	34.67
.8414	.7079	1.5	1.189	1.413	.3758	.1413	8.5	2.661	7.079	.1679	.02818	15.5	5.957	35.48
.8318	.6918	1.6	1.202	1.445	.3715	.1380	8.6	2.692	7.244	.1660	.02754	15.6	6.026	36.31
.8222	.6761	1.7	1.216	1.479	.3673	.1349	8.7	2.723	7.413	.1641	.02692	15.7	6.095	37.15
.8128	.6607	1.8	1.230	1.514	.3631	.1318	8.8	2.754	7.586	.1622	.02630	15.8	6.166	38.02
.8035	.6457	1.9	1.245	1.549	.3589	.1288	8.9	2.786	7.762	.1603	.02570	15.9	6.237	38.90
.7943	.6310	2.0	1.259	1.585	.3548	.1259	9.0	2.818	7.943	.1585	.02512	16.0	6.310	39.81
.7852	.6166	2.1	1.274	1.622	.3508	.1230	9.1	2.851	8.128	.1567	.02455	16.1	6.383	40.74
.7762	.6026	2.2	1.288	1.660	.3467	.1202	9.2	2.884	8.318	.1549	.02399	16.2	6.457	41.69
.7674	.5888	2.3	1.303	1.698	.3428	.1175	9.3	2.917	8.511	.1531	.02344	16.3	6.531	42.66
.7586	.5754	2.4	1.318	1.738	.3388	.1148	9.4	2.951	8.710	.1514	.02291	16.4	6.607	43.65
.7499	.5623	2.5	1.334	1.778	.3350	.1122	9.5	2.985	8.913	.1496	.02239	16.5	6.683	44.67
.7413	.5495	2.6	1.349	1.820	.3311	.1096	9.6	3.020	9.120	.1479	.02188	16.6	6.761	45.71
.7328	.5370	2.7	1.365	1.862	.3273	.1072	9.7	3.055	9.333	.1462	.02138	16.7	6.839	46.77
.7244	.5248	2.8	1.380	1.905	.3236	.1047	9.8	3.090	9.550	.1445	.02089	16.8	6.918	47.86
.7161	.5129	2.9	1.396	1.950	.3199	.1023	9.9	3.126	9.772	.1429	.02042	16.9	6.998	48.98
.7079	.5012	3.0	1.413	1.995	.3162	.1000	10.0	3.162	10.000	.1413	.01995	17.0	7.079	50.12
.6998	.4898	3.1	1.429	2.042	.3126	.09772	10.1	3.199	10.23	.1396	.01950	17.1	7.161	51.29
.6918	.4786	3.2	1.445	2.089	.3090	.09550	10.2	3.236	10.47	.1380	.01905	17.2	7.244	52.48
.6839	.4677	3.3	1.462	2.138	.3055	.09333	10.3	3.273	10.72	.1365	.01862	17.3	7.328	53.70
.6761	.4571	3.4	1.479	2.188	.3020	.09120	10.4	3.311	10.96	.1349	.01820	17.4	7.413	54.95
.6683	.4467	3.5	1.496	2.239	.2985	.08913	10.5	3.350	11.22	.1334	.01778	17.5	7.499	56.23
.6607	.4365	3.6	1.514	2.291	.2951	.08710	10.6	3.388	11.48	.1318	.01738	17.6	7.586	57.54
.6531	.4266	3.7	1.531	2.344	.2917	.08511	10.7	3.428	11.75	.1303	.01698	17.7	7.674	58.88
.6457	.4169	3.8	1.549	2.399	.2884	.08318	10.8	3.467	12.02	.1288	.01660	17.8	7.762	60.26
.6383	.4074	3.9	1.567	2.455	.2851	.08128	10.9	3.508	12.30	.1274	.01622	17.9	7.852	61.66
.6310	.3981	4.0	1.585	2.512	.2818	.07943	11.0	3.548	12.59	.1259	.01585	18.0	7.943	63.10
.6237	.3890	4.1	1.603	2.570	.2786	.07762	11.1	3.589	12.88	.1245	.01549	18.1	8.035	64.57
.6166	.3802	4.2	1.622	2.630	.2754	.07586	11.2	3.631	13.18	.1230	.01514	18.2	8.128	66.07
.6095	.3715	4.3	1.641	2.692	.2723	.07413	11.3	3.673	13.49	.1216	.01479	18.3	8.222	67.61
.6026	.3631	4.4	1.660	2.754	.2692	.07244	11.4	3.715	13.80	.1202	.01445	18.4	8.318	69.18
.5957	.3548	4.5	1.679	2.818	.2661	.07079	11.5	3.758	14.13	.1189	.01413	18.5	8.414	70.79
.5888	.3467	4.6	1.698	2.884	.2630	.06918	11.6	3.802	14.45	.1175	.01380	18.6	8.511	72.44
.5821	.3388	4.7	1.718	2.951	.2600	.06761	11.7	3.846	14.79	.1161	.01349	18.7	8.610	74.13
.5754	.3311	4.8	1.738	3.020	.2570	.06607	11.8	3.890	15.14	.1148	.01318	18.8	8.710	75.86
.5689	.3236	4.9	1.758	3.090	.2541	.06457	11.9	3.936	15.49	.1135	.01288	18.9	8.811	77.62
.5623	.3162	5.0	1.778	3.162	.2512	06310	12.0	3.981	15.85	.1122	.01259	19.0	8.913	79.43
.5559	.3090	5.1	1.799	3.236	.2483	.06166	12.1	4.027	16.22	.1109	.01230	19.1	9.016	81.28
.5495	.3020	5.2	1.820	3.311	.2455	.06026	12.2	4.074	16.60	.1096	.01202	19.2	9.120	83.18
.5433	.2951	5.3	1.841	3.388	.2427	.05888	12.3	4.121	16.98	.1084	.01175	19.3	9.226	85.11
.5370	.2884	5.4	1.862	3.467	.2399	.05754	12.4	4.169	17.38	.1072	.01148	19.4	9.333	87.10
.5309	.2818	5.5	1.884	3.548	.2371	.05623	12.5	4.217	17.78	.1059	.01122	19.5	9.441	89.13
.5248	.2754	5.6	1.905	3.631	.2344	.05495	12.6	4.266	18.20	.1047	.01096	19.6	9.550	91.20
.5188	.2692	5.7	1.928	3.715	.2317	.05370	12.7	4.315	18.62	.1035	.01072	19.7	9.661	93.33
.5129	.2630	5.8	1.950	3.802	.2291	.05248	12.8	4.365	19.05	.1023	.01047	19.8	9.772	95.50
.5070	.2570	5.9	1.972	3.890	.2265	.05129	12.9	4.416	19.50	.1012	.01023	19.9	9.886	97.72
.5012	.2512	6.0	1.995	3.981	.2239	.05012	13.0	4.467	19.95	.1000	.01000	20.0	10.000	100.00
.4955	.2455	6.1	2.018	4.074	.2213	.04898	13.1	4.519	20.42					
.4898	.2399	6.2	2.042	4.169	.2188	.04786	13.2	4.571	20.89		10^{-3}	30		10^{3}
.4842	.2344	6.3	2.065	4.266	.2163	.04677	13.3	4.624	21.38	10^{-2}	10^{-4}	40	10^{2}	10^{4}
.4786	.2291	6.4	2.089	4.365	.2138	.04571	13.4	4.677	21.88			50		10^{5}
											10^{-5}	60		10^{6}
.4732	.2239	6.5	2.113	4.467	.2113	.04467	13.5	4.732	22.39	10^{-3}	10^{-6}	70	10^{3}	10^{7}
.4677	.2188	6.6	2.138	4.571	.2089	.04365	13.6	4.786	22.91		10^{-7}	80		10^{8}
.4624	.2138	6.7	2.163	4.677	.2065	.04266	13.7	4.842	23.44	10^{-4}	10^{-8}	90	10^{4}	10^{9}
.4571	.2089	6.8	2.188	4.786	.2042	.04169	13.8	4.898	23.99	10^{-5}	10^{-9}			
.4519	.2042	6.9	2.213	4.898	.2018	.04074	13.9	4.955	24.55		10^{-10}	100	10^{5}	10^{10}

(3) *Bandwidth.* Measure the bandwidth of the amplifier at 3-db points. Measurement is accomplished by turning the RF generator slightly off the 37.5-MHz center of frequency until the output falls off 3 db. The bandwidth is then the frequency difference between 3-db points. For proper operation of the HF rereceiver, the bandwidth of the 37.5-MHz amplifier should be between 280 and 320 kHz.

(4) *Output.* Connect a Multimeter dc voltage 50-volt scale to A1A11E5, and the other probe to E6. Vary the input level, and see that the output on A1A11E5 varies for +22.5 to 0. If the level does not vary, refer to the troubleshooting procedures in para 7-6*b*.

8-9. Alignment and Test of 2d IF Amplifier and 3d Mixer A3A1

(fig. 8-13)

a. General. Module A3A1 consists of an IF amplifier that is tunable from 2.0 to 3.0 MHz, with its output feeding an IF image rejection filter and a 3d mixer (A3A1A2Q1) which combines the vfo (A3A2) output and the output of A3A1A1Q1 to produce a 455-kHz IF signal; and an impedance matching stage (A3A1A2Q2) which feeds the IF output through A3A1E1 to the mechanical filters of 3d IF bandwidth selector A1A4. The IF amplifier is tuned by piston capacitors C1 and C2, which are coupled to the KC indicator, cam and gearbox along with vfo unit A3A2. Refer to the schematic diagram, figure 6-27. The alignment procedure is given in *b* below.

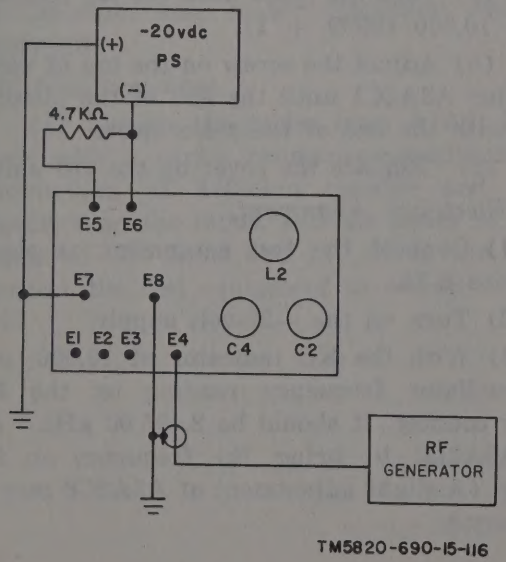

Figure 8-13. 2d IF amplifier and 3d mixer A3A1, test setup.

b. Alignment Procedure.

(1) *Removal.* Prior to alignment or testing, the entire gearbox unit must be removed from the HF receiver. To remove the gearbox from the HF receiver, refer to the disassembly procedure in paragraph 7-12.

(2) *Preparatory.*

(*a*) Connect the 1st IF amplifier and 2nd mixer module to the test setup as shown in figure 8-3.

(*b*) Turn on the —20-volt supply.

(3) *Alignment.*

(*a*) Connect the voltmeter to A3A1A1E2 which is top side of C4. Set the RF generator to 2.455 kHz and the KC indicator to 1,000 (999.9 + 0.1) KC. Tune C4 for a peak output signal.

(*b*) Turn the KC indicator to 1000.0 (999.9 + 0.1) with the KC TUNING control and vary the RF generator frequency around 2 MHz. Connect the voltmeter to A3A1A1E1 (top side of C2). Look for the peak on the voltmeter. Adjust the RF generator output attenuator until a noticeable peak is detected. Avoid overdriving the circuit by keeping the RF generator voltage at approximately —40 dbm (40 mv). Peak frequency should occur at 2 MHz ±50 kHz.

(*c*) Adjust the C2 and L2 (L2 has the greatest effect at this end) frequency to bring in the peak frequency to 2 MHz.

(*d*) Turn the KC indicator to 0000 with the KC TUNING control (this should occur at the opposite end of the extreme cam position), and vary the RF generator frequency around 3 kHz. Look for a peak on the RF voltmeter. Adjust the RF generator attenuator until a noticeable peak is detected. Avoid overdriving the circuit as before. This peak should be at 3 MHz ±50 kHz.

(*e*) Adjust C2 and L2 (C2 has the greatest effect at this frequency) to bring in the peak frequency to 3 MHz.

(*f*) Repeat the procedures in (*a*) through (*d*) above until the end points are within ±50 kHz of the desired frequencies.

(*g*) Make a test run, checking all points given in (4)(*e*) below.

(*h*) If the points are not within tolerance, repeat (*a*) through (*f*) above, adjusting the end points until any error is distributed over the entire frequency range of the unit.

(*i*) Note that the gain of the 2d and 3d IF is affected by the setting of trap circuit C1, C3, C4, and L1. The trap should be set first. The 2d IF gain at A3A1A1E3 is nominal 30 ±6 db. The attenuation of a signal at 2.455 kHz inserted at A3A1E4 and measured at A3A1A1E3 is approximately 45 ±5 db and 20 ±3 db at 3.455 kHz.

(*j*) If replacement of C1 or C3 becomes necessary, install them without adjusting C2 and L2 or C4. Then, with the KC indicator set to 0000, adjust C1 or C3 to tune the IF or trap to get the proper gain and rejection.

(4) *Disposition after alignment.*

(*a*) Turn off the 20-volt supply.

(*b*) Supply a proper vfo signal to terminal A3A1E3 at 0 dbm, and connect the oscilloscope to A3A1E1.

(*c*) Turn on the power supply.

(*d*) Vary the RF generator frequency. A mixed signal should appear on the oscilloscope (455 kHz). This is a preliminary test to show that the mixer in the module is operating properly.

(*e*) Calibration data for the 2d IF amplifier and 3d mixer module is as follows:

Counter setting	*Frequency (MHz)*
0000	3.000
2000	2.800
4000	2.600
6000	2.400
8000	2.200
10000	2.000

NOTE

Tolerance on all readings is ±50 kHz.

(*f*) Disconnect all test fixtures. The gear block is ready for installation in the hf receiver if vfo unit A3A2 has been tested and aligned according to the vfo alignment procedure.

(*g*) Reinstall the gear block in the hf receiver by following the assembly procedure in paragraph 7-12*b*.

8-10. Alignment and Test of Vfo Unit A3A2

(fig. 8-14)

a. General. The vfo unit is a tunable oscillator coupled through the precision gear drive to a mechanical counter. A cam drives piston capacitor C1 which carries the frequency of the vfo from 2,455.00 kHz to 3,455.00 kHz in a linear manner with rotation. The vfo unit output is fed through A3A2J1 to A3A1E3 on 2d IF and 3d mixer module A3A1. The combined outputs produce a 455-kHz IF signal which is fed to 3d IF bandwidth selector A1A4 and through SIR filter A5A2 to A5J1 (455-kHz IF output). The vfo unit is aligned separately, but final evaluation and testing must be done in conjunction with the 2d IF amplifier and 3d mixer module. The alignment procedure for the vfo is listed below.

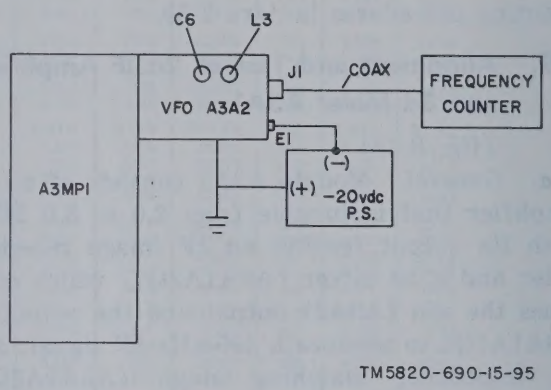

Figure 8-14. Variable frequency oscillator unit A3A2 test setup.

b. Mechanical Alignment.

(1) *Removal.* Remove the gearbox unit from the HF receiver by following the disassembly procedure in paragraph 7-12*a*.

(2) *Mechanical adjustment.*

(*a*) Turn the gears until the KC indicator shows 10,000 (9999 + 1).

(*b*) Adjust the screw on the top of piston capacitor A3A2C1 until the end of the piston is flush with the end of the glass sleeve.

(*c*) Replace the cover on the vfo unit.

c. Electrical Alignment.

(1) Connect the test equipment as shown in figure 8-14.

(2) Turn on the —20-volt supply.

(3) With the KC indicator at 10,000, note the oscillator frequency reading on the frequency counter. It should be 2,455.00 kHz. Adjust A3A2L3 to bring the frequency on frequency. (A slight adjustment of A3A2C6 may be necessary.)

(4) Turn the gearbox so that the KC indicator shows 0000. The frequency counter should indicate 3,455.00 kHz. Adjust C6 to bring the frequency on 3,455.00 kHz (a slight adjustment of L3 may be necessary).

(5) Repeat (3) and (4) above until the end points are on the specified frequencies, within ±5 kHz.

(6) Make a test run, checking all the points shown *c* below.

NOTE

Always approach the reading by turning the indicator from the same direction. This will minimize errors.

(7) If points are not within tolerance, repeat (3) through (6) above, adjusting the end points until any error is distributed over the entire frequency range of the vfo unit.

(8) Repeat (6) above as a final check.

d. Disposition after Alignment and Test.

(1) Disconnect all test equipment.

(2) Reconnect the signal wires and connector of the vfo unit.

(3) Reinstall 2d IF tuning unit A3 by following the assembly procedure in paragraph 7-12*b*.

8-11. Test of 3d IF Bandwidth Selector A1A4

a. General. 3d IF bandwidth selector A1A4 is a group of five mechanical filters with the following bandwidths: 12.0, 6.0, 3.1, 1.5, and 0.5 kHz. The filter assembly requires no alignment; however, the filters may be tested to determine the insertion loss, center frequency, and 6-db bandwidth.

b. Insertion Loss.

(1) Remove the cables from A1A4; replace them with a series resistance-capacitance (rc) combination of 150-ohm resistor and 130-pf capacitor on the input, and the series rc combination of 200 ohms and 130 pf on the output. Connect the test equipment as shown in figure 8-15.

(2) Set an RF generator to 455 kHz, with a signal level of −10 dbm (70 mv). Place the high impedance probe of the voltmeter on test point 2 , figure 8-15, and slowly rock the RF generator frequency until a maximum reading is obtained. Place the high impedance probe of the voltmeter on test point 1 , and note the input signal level at this point.

(3) The insertion loss of the filter may be found from the ratio of the input signal level in volts to the output signal level in volts. (See ratio of voltage and decibels, table 8-1). The maximum insertion loss is given in the chart below.

Bandwidth (kHz)	*Max insertion loss (db)*
0.5	20
1.5	25
3.0	25
6.0	25
12.0	10

c. Vfo Tracking Calibration Chart.

Exact vfo frequency readings for various settings of KC indicator.

Setting	*Frequency (kHz)*
0000	3455.00
1000	3355.00
2000	3255.00
3000	3155.00
4000	3055.00
5000	2955.00
6000	2855.00
7000	2755.00
8000	2655.00
9000	2555.00
10000	2455.00

NOTE

Tolerance on all readings is ±5.0 kHz.

d. Bandwidth Measurements.

(1) Connect the RF generator as described in *b*(2) above, and adjust it to 455 kHz. Find the point of maximum response. Adjust the RF generator until the output falls 6 db or until the output voltage falls to one-half of the maximum value. Repeat this measurement on the other side of the frequency giving maximum response.

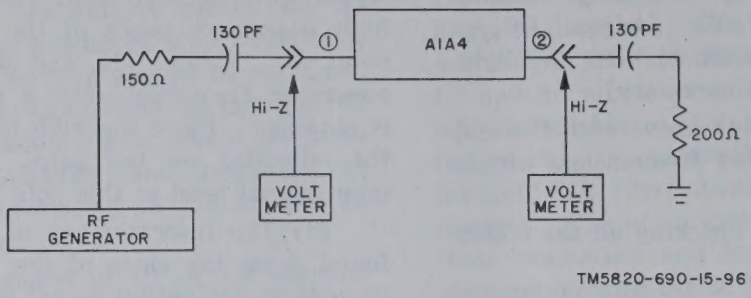

Figure 8-15. 3d IF bandwidth selector A1A4, test setup.

(2) The 6-db bandwidth of the filter is then the difference between the two 6-db points and should be within ±200 Hz of the value prescribed for the particular filter (that is, 12 ±0.20 kHz).

(3) The average of the two 6-db frequencies is the center frequency and should be 455 kHz ±100 Hz for all filters.

8-12. Alignment and Test of 3d IF and Agc A1A5

a. General. 3d IF amplifier and anl A1A5A1 is a wideband amplifier and as such, needs no special alignment; however, the gain and dynamic range of the amplifier should be checked to insure the proper operating condition. The test procedure is outlined in *b* below. The agc-analyzer circuitry can be checked quite easily in conjunction with the 3d IF amplifier. The agc-analyzer test described below will simply check the unit for correct operation. The agc unit cannot be aligned as a separate circuit, but must be aligned in the entire HF receiver. A detailed alignment procedure for the agc amplifier describing how to adjust the agc threshold levels is given in the HF receiver alignment procedure, paragraph 8-22.

b. Procedure.

(1) *Gain.*

(*a*) Check the power supply leads going into 3d IF and agc IF terminals A1A5E8, A1A5E14 (−20 volts) and A1A5E4 (+22.5 volts). Connect a 50-ohm cable from the input of 3d IF amplifier A1A5E9 to the RF generator. Set the RF generator level to -70 dbm (70μv) at 455 kHz. Connect the output cable to terminal A1A5A1E3 to the 50-ohm probe of the voltmeter. Adjust the RF generator level to maintain an output below 0.25 volt.

(*b*) Set AGC switch A2S4 to OFF (manual) and GAIN RF/IF (manual gain control) A2R9 to maximum gain. Set ANL control A2R1 on the front panel to OFF.

(*c*) With 30 percent modulation (either 400 Hz or 1,000 Hz is acceptable), measure the output of the 3d IF amplifier at A1A5E11. The gain of the stage is the difference in dbm between the input and output signal levels, or it can be related to the ratio of the output voltage level to the input voltage level by table 8-1. In any case, the gain of the 3d IF amplifier and anl A1A5A1 should be 70 db or more.

(2) *Dynamic Range.* To measure the dynamic range, simply increase the input signal until the output signal level does not change by a corresponding amount. At this level the amplifier begins to saturate. To find the lower limit of amplifier operation, decrease the input signal level until a change in the input level no longer causes a change in the output level. At this point, the input signal level is below the level of the IF amplifier noise. The dynamic range is the difference of the saturated signal level to the noise level, or it can be found from the voltage ratios and table 8-1. The saturation level should be at least a 0.25-volt output with a 100-μv input signal; the output noise level should be approximately 0.1 volt rms.

(3) *Automatic noise limiter.* To test the anl portion of 3d IF amplifier and anl A1A5A2, apply a modulated signal. Place the oscilloscope at output A1A5A1E11. Vary the setting of ANL control R1 (front panel). Note whether or not clipping of the signal occurs with different set-

tings of the ANL control. This is a qualitative test and no minimum requirements are made.

(4) *Agc test.* Connect power or verify power connections to agc detector and amplifier A1A5A2. Connect the signal generator, set at 455 ±10 kHz, to IF input A1A5E9. Set the signal level to 0 volt. Place AGC selector switch S4 to FAST. Connect the voltmeter to A1A5E3 to monitor IF —agc voltage.

(a) IF —agc test. Note zero-signal agc voltage. This should be approximately —4 ±1 volt dc. If it is not, adjust threshold control A1A3A2R11 to set IF —agc to within this range. Gradually increase the level from the RF generator. The IF —agc voltage should fall from the —4-volt level toward 0 volt, reaching a minimum of at least —1.8 ±0.1 volt. This minimum should occur at an RF generator output of —10 dbm or less.

(b) Rf-agc test. Return the RF generator output level to zero. Place the voltmeter probe on RF-agc output A1A5E6. With zero input signal, zero agc voltage should be attained. By increasing the RF generator, the RF-agc should rapidly increase toward —5 volts

(5) *Disposition After Test.* Remove the oscilloscope, voltmeter, RF generator, and extra cables.

8-13. Alignment and Test of Bfo and Detector A1A6

a. General. The bfo and detector is a combination tunable oscillator with the tuning range centered at 455 kHz, an am. detector, and a product detector for the reception of cw and ssb signals. The bfo portion of the module may be aligned separately, but the testing and evaluation of the detectors must be done in conjunction with the entire system. The alignment procedure for the bfo is given in *b* below.

b. Procedure.

(1) Examine the wiring of bfo oscillator A1A6 to verify the proper connection.

(2) Adjust the BFO tuning control (front panel) to the center of its range. Place function switch S2 in the CW/SSB position, and apply power to the HF receiver. Place AGC switch S14 in the OFF (manual) position and manual GAIN RF/IF control R9 to the maximum (fully clockwise) position.

(3) Set the RF generator to 455 kHz ±50 Hz and the output level to approximately 10 ma. with modulation off. Connect the RF generator output to cable A1A5E9. A heterodyne note should be heard in the speaker.

(4) With the BFO tuning control in the center of its range, adjust tuning capacitor C13 until the frequency of 455 kHz is reached, as indicated by an audio zero beat.

(5) When the bfo is aligned as described in (1) through (4) above, the frequency range may be tested as follows: turn the BFO tuning control fully clockwise, and check to see if the frequency changes at least 3 kHz to a value of 458 kHz or more; then turn the BFO tuning control fully counterclockwise, and check to see if the frequency again changes at least 3 kHz to a value of approximately 452 kHz or less.

8-14. Audio Amplifier A1A7 Test

Connect audio amplifier A1A7 as shown in figure 8-16. With the audio oscillator set at 1 kHz and a maximum input of 0.5 volt pp at E9, the output voltage should be 34 ±2 IF pp at E5. If the waveform has severe crossover distortion, resistor R6 requires replacing with a different value. (The value of R6 is dependent on the integrated circuit variations and can vary between 5.6 to 15 kilohms.) If the above results are not attainable, check the test setup (keep the leads short and shielded); then check for a bad component.

8-15. Carrier-Operated Relay Amplifier A1A12

(fig. 8-17)

a. General. The c.o.r. circuit is most conveniently tested when mounted in position in the HF receiver. Do not remove it from the receiver chassis. Nothing in this circuit requires alignment or adjustment.

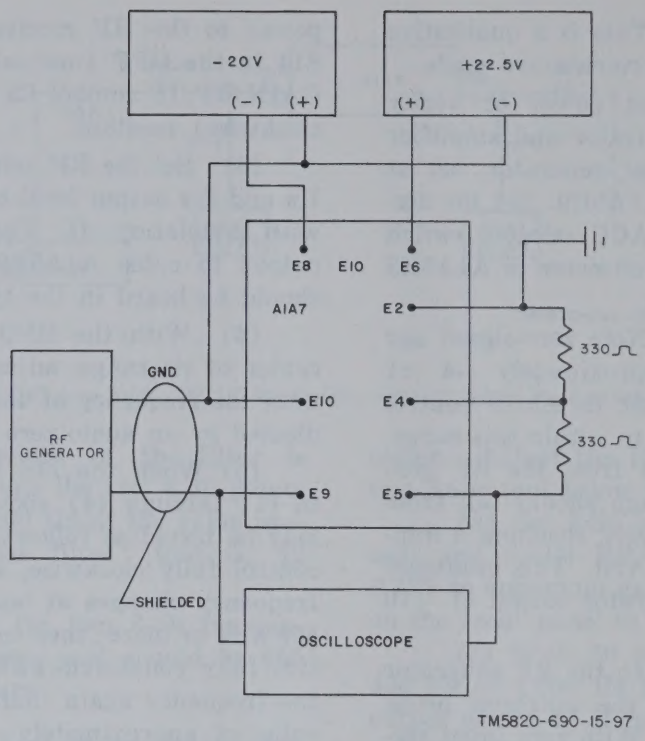

Figure 8-16. *Audio amplifier test setup.*

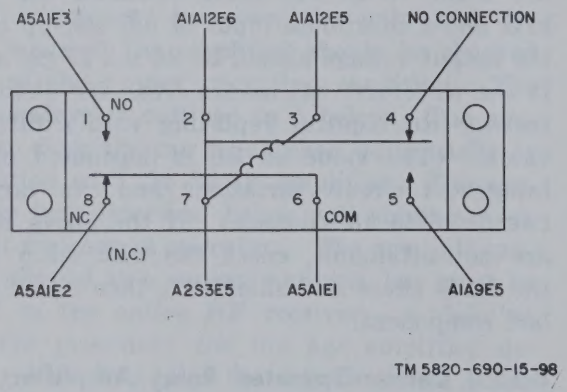

Figure 8-17. *Wiring diagram of carrier-operated relay.*

b. Preparatory. When lamp DS2 is on, relay K1 is energized. When DS2 is off, K1 is deenergized. The former condition will be referred to as the on state, and the latter will be called the off state.

c. Circuit Switching.

(1) Set AGC select switch A2S4 to OFF.

(2) Turn C.O.R. SENS switch R4 ON but in the maximum counterclockwise position. Turn the GAIN RF/IF control to maximum clockwise position. Relay is in the off state.

(3) Gradually increase c.o.r. sensitivity by turning R4 clockwise until the relay switches to the on state.

(4) Turn the GAIN RF/IF control counterclockwise until the relay switches off. Again, increasing c.o.r. sensitivity slightly should switch the relay back to on.

(5) This process should continue until reducing the GAIN RF/IF control no longer switches the relay to off.

NOTE

Circuit will periodically switch or "flash" when the sensitivity is set at threshold. This condition is normal and will be considered as being on for the purpose of test definition.

8-16. Power Supply Test

a. General. The power supply should provide the following:

Voltage	*Approximate current (ma)*
110 vdc unregulated	10
6.3 vac unregulated	300
+22.5 vdc regulated	230
−20 vdc regulated	180

b. Adjustments. The only adjustment required is to set up the regulation voltage for +22.5 and the —20 volts, which is done with the HF receiver operating normally. See figure 7-4, 7-5, and 7-6 for component locations.

(1) Place the voltmeter at A1A9E1 for +22.5 volts and A1A9E10 for —20 volts on regulator board A1A9.

(2) Adjust trimming potentiometer R7 for +22.5 volts dc and R18 for —20 volts dc to bring the supply line to within ±0.5 volt of the nominal (—20 or +22.5 volts).

c. Test.

(1) Set the line voltage to 117 volts ac. Measure +22.55- and —20- volt power voltages.

(2) Vary the line voltage ±10 percent and measure the dc supply lines.

(3) The supply lines should not vary more than ±0.05 volt.

Section III. HF RECEIVER FINAL ALIGNMENT PROCEDURE

8-17. General

a. Each alignment step described must be made in sequence because settings of various function controls are interacting (fig. 7-2, through 7-6 and 8-1). The instructions assume that each subassembly alignment has been done or checked and found in good operating order.

b. Slide the dust cover off the HF receiver, and reconnect the line cord to the ac power line.

8-18. Power Supplies

a. Place the voltmeter at test point A1A9E1 for +22.5 volts dc and A1A9E10 for —20 volts dc on voltage regulator A1A9.

b. Adjust trimming potentiometer A1A9R7 for +22.5 volts and A1A9R18 for —20 volts dc to bring the supply line to within ±0.2 volt of nominal (—20 volts or +22.5 volts).

8-19. 1st Local Oscillator

It may be necessary to check and retune the 1st local oscillator before proceeding with further receiver alignment.

a. Remove the output cable from A4J3, and connect it to the 50-ohm input of the frequency counter.

b. Check each band to see if the oscillator frequency is within ±40 kHz of the frequency indicated by paragraph 8-5*b*. Note the bands that are off frequency. Remove the dust cover on the A4 assembly. Use a lintless swab and alcohol to clean the rotor contacts of switch A4S1 (A, B, C, D, E, and F). Recheck the frequencies. If retuning is necessary, first soften the cement holding the tuning cores in place with a few drops of suitable solvent prior to tuning.

c. After the oscillator is properly aligned, cement the cores in place with a drop of cement on each core.

d. Reconnect the cable to A4J3.

8-20. Preamplified and Band Selector Assembly

a. Remove the +22.5-volt lead from the 1st local oscillator input A4FL4 to disable the oscillator.

b. Unsolder the wire from A4E7 to 1st mixer input A4A3W2. Connect 1A4E7 to the 50-ohm probe of the voltmeter.

c. Attach the RF generator output cable to antenna jack A5J2.

d. Set the KC TUNING control to 500.0 KC.

e. Set antenna trimmer A4C1 to the midrange position.

NOTE

Omit *f* through *i* below if switch assembly A4S1 has not been removed from the HF receiver or if the shafts were not disconnected.

f. Unsolder the lead from C2 to the switch stator A4A6E2. Place a capacity measuring meter (inductance-capacitance (1c) meter) between this lead and ground.

g. Loosen the setscrews on the shaft couplings of the C2 shaft. Rotate the shaft until the maximum and minimum capacity positions are found.

h. Set C2 to the mean or midcapacity position $\frac{(C\ max + C\ min)}{2}$ at the point at which turning the shaft clockwise will result in decrease of capacity.

i. Resolder the A4C2 stator lead to switch contact A4A6E2.

j. Set the RF generator to the midband frequency, that is, 1.500 MHz, 2.500 MHz, 3.500 MHz. . . 30.500 MHz.

k. Before tuning each core slug, soften the cement with a few drops of suitable solvent.

l. Peak tune each coil to the midband frequency, maintaining the input level of RF generator below the preamplifier and band selector assembly saturation point.

m. Resolder the wire from A4E7 to mixer input A4A3W2 on board A4A3 and +22.5 volts to A4FL4.

8-21. 37.5-MHz Local Oscillator Drive Level

a. Disconnect the cable in the output of the 37.5-MHz filter amplifier (A1A3P2 from A1A13J1).

b. Connect the high impedance probe of the voltmeter to the output of 37.5-MHz local oscillator amplifier A1A11 at A1A11J3.

c. Beginning on band 30 (30 to 31 MHz), adjust A1A2A1R6 on harmonic generator A1A2A1 to set the 37.5-MHz output level between —1 dbm and +3 dbm (0.2 volt rms and 0.32 volt rms).

d. Switch through all the bands, noting the output signal level. If the automatic level control is working properly, the voltage should remain within the range specified in *c* above.

e. If any band does not satisfy this requirement, make the proper adjustment on A1A2A1R6 and repeat the measurement on all bands.

f. If automatic level control is impossible to maintain on all bands, refer to the harmonic generator and mixer (A1A2) test procedure in paragraph 8-7 and make replacement or repair of unit A1A2.

8-22. Agc

a. Connect the RF generator to antenna input A4J2. Any band at approximately midband may be used for this procedure, that is, 15.500 MHz to xx. 700 MHz. Set the AGC switch to FAST, function switch to AM, ANL control to OFF, and C.O.R. SENS and CAL controls to OFF.

b. Set the RF generator to 30 percent, 1-kHz amplitude modulation at approximately 1 μv, and carefully tune it to the center of the receiver bandpass. Turn the RF generator output level to zero.

c. Place the voltmeter at IF agc A1A5E3. Jumper RF agc test point A1A5E6 to ground.

d. With the signal present, adjust IF agc threshold potentiometer A1A5A2R11 to develop —2.0 volts of IF agc (A1A5E3) at —90-dbm input at ANT. Recheck tuning while adjusting agc.

e. Remove the jumper on the RF agc, and place the voltmeter on A1A5E6.

f. Adjust RF agc threshold potentiometer A1A5A2R1 to set the RF agc to —0.1 volt dc at —90 dbm.

g. Place the vtvm at audio output terminals A5J4-a and b.

h. Increase the RF generator level from —110 dbm to —10 dbm. The audio level should remain within 3 db throughout this range and undistorted.

i. A slight readjustment in IF agc threshold potentiometers A1A5A2R11 and A1A5A2R1 may be required to optimize performance throughout this dynamic range.

8-23. Frequency Calibration

a. Turn CAL marker control A2R2 on and to the maximum clockwise position.

b. Turn function switch A2S2 to CW-SSB.

c. Turn the SELECT switch to the 0.5 kHz position, and tune BFO control R7 to obtain the lowest frequency tone in speaker output.

d. Turn the SELECT switch to the 6-kHz bandwidth.

e. Tune the KC TUNING control in the vicinity of any incremental 100-kHz frequency.

f. A zero beat should be obtained within ±5 kHz of the 100-kHz increment.

NOTE

Depressing the FINE TUNING control allows the indicator counter to be turned while the precision gear train remains stationary.

g. Turn FINE TUNING control to obtain an exact zero beat. Depress the FINE TUNING control and turn the indicator to show the exact nominal frequency.

h. Tune to the next 100-kHz increment and obtain a zero beat.

i. This frequency should be within ±2 kHz of nominal. If the error is more than 2 kHz but less than 20 kHz and is not additive, refer to the vfo test procedure, paragraph 8-10.

NOTE

If small heterodyne signals appear at 50-kHz intervals, reduce the setting of CAL marker control A2R2 and disregard the signals. They are a result of excessive calibration levels.

j. Be sure CAL control A2R2 is returned to the OFF position following alignment.

Section IV. HF RECEIVER FINAL TEST PROCEDURE

8-24. General

The final tests given in this section are to be performed on repaired or overhauled equipment to insure that it meets required performance standards before equipment is returned to stock or reissued.

8-25. Final Testing Procedure

a. General.

(1) *Test equipment required.*

Federal stock number	*Item*
6625-819-0472	Signal Generator AN/GRM-50
6625-668-9418	Spectrum Analyzer TS-723/U
6625-669-0742	Voltmeter, Electronic ME-30B/U
6625-911-6368	Digital Readout Electronic Counter AN/USM-207
5965-163-1791	Loudspeaker LS-3 or equivalent.

(2) *Test conditions* (fig. 8-18). Fabricate special power cable by connecting one desired length wire individually to pins A, B, and F of an MS3116F10-6S connector. Prepare the other ends of the wires to fit the power source used. Prepare shielded cable 4 feet long with shield and center conductor fanned at each end. Prepare shielded cable with telephone-type plug to fit LS-3 loudspeaker on one end; fan the shield and center conductor at other end.

(3) *Test connections* (fig. 8-18). Connect 3-foot length of coaxial cable RG-55 with UG-88/U at each end between output jack of signal generator and J2 of HF receiver. Connect special power cable connector MS3116F10-6S to J3 on HF receiver and connect other end of wire to power source. Connect shield of 4-foot coaxial cable to pin D of connector J4 on HF receiver. Connect center conductor of this cable to pin E of J4. Connect other end of shielded 3-foot cable to the INPUT binding posts of Voltmeter, Electronic ME-30B/U with shield to GND binding post. Connect shielded loudspeaker cable to binding posts on INPUT of Voltmeter, Electronic ME-30B/U.

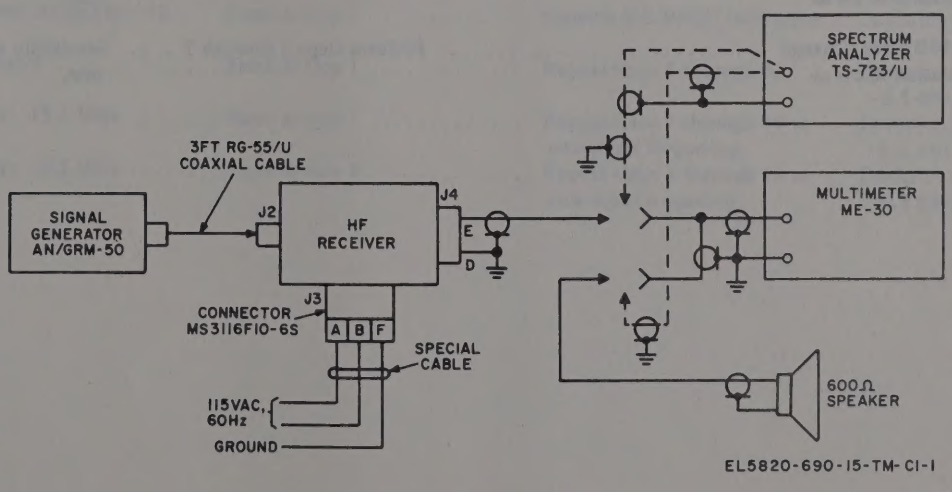

Figure 8-18. Final test procedure, test setup.

b. Sensitivity Test.

(1) *Test connections.* Connect equipment as shown in figure 8-18 and explained in *a*(3) above.

(2) *Test conditions.* Be sure that the ME-30B/U does not pick up stray electromagnetic interference. Check all shields and grounds for good connections.

Step No.	Test equipment	Control settings: Equipment under test	Test procedure	Performance standard
1	Signal generator: RANGE switch: 530 KC-1800 KC Frequency: 1.5 MHz Rf level: −105 dBm MODULATION SELECTOR switch: 1 kHz MODULATION AMPLITUDE control: 30%	HF receiver: MC TUNING: 1 MC AGC switch: FAST KC TUNING: 5000 KC C.O.R. SENS: OFF ANL control: OFF SELECT switch: 3 KC (IF Bandwidth) BFO control: OFF AM CW-SSB switch: AM GAIN RF/IF control: Maximum cw	Turn the equipment power on and warm up for at least 10 minutes.	None.
2	Same as step 1	Same as step 1	Adjust GAIN RF/IF control on receiver until a 0-dB indication is obtained on ME-30B/U.	
3	MODULATION SELECTOR switch: CW	Same as step 1 except GAIN RF/IF control is changed.	Set signal generator output to CW, and adjust rf level on signal generator to obtain −10 dB on ME-30B/U.	
4	MODULATION SELECTOR: 1 kHz MODULATION AMPLITUDE: 30%	Same as step 3	Set signal generator output for amplitude modulation at 1000 Hz and check for 0-dB reference on ME-30B/U.	If ME-30B/U meter remains at 0-dB reading, proceed to step 6.
5	Same as step 4	Same as step 3	Adjust GAIN RF/IF control on receiver until 0-dB reference point is reestablished.	
6	MODULATION SELECTOR: CW	Same as step 3	Set signal generator output to CW, and observe a −10-dB indication on the ME-30B/U.	Repeat steps 2, 3, and 4 as many times as necessary until requirements are met (0 dB for 30% modulation, −10 dB for cw).
7	Same as step 6	Same as step 6	Record rf level indicated on signal generator.	Sensitivity shall be −105 dBm min.
8	Frequency: 10.5 MHz (Change from modulation to cw as required.)		Perform steps 2 through 7	Sensitivity shall be −105 dBm min.
9	Frequency 20.5 MHz (Change from modulation to cw as required.)		Perform steps 2 through 7	Sensitivity shall be −105 dBm min.
10	Frequency 30.5 MHz (Change from modulation to cw as required.)		Perform steps 2 through 7	Sensitivity shall be −105 dBm min.

c. Dynamic Range Test.

(1) *Test connections.* Connect equipment as shown in figure 8-18 and explained in *a*(3) above.

(2) *Test conditions.* Be sure that the ME-30B/U does not pick up stray electromagnetic interference. Check all shields and grounds for good connections.

Step No.	Test equipment	Control settings: Equipment under test	Test procedure	Performance standard
1	Signal generator: Frequency: 1.5 MHz Rf level: −110 dBm MODULATION SELECTOR: 1 kHz	HF receiver: AGC switch: FAST C.O.R. SENS: OFF ANL control: OFF SELECT switch: 6 KC BFO control: off AM CW-SSB switch: AM GAIN RF/IF control: Maximum cw	Turn on equipment and allow 10-minute warmup.	
2	Same as step 1	Same as above	Tune HF receiver to 1.5 MHz and adjust tuning until ME-30B/U peaks and tone is clear on loudspeaker.	
3	Same as step 1	Same as step 1	Adjust GAIN RF/IF control on HF receiver until the ME-30B/U indicates −5 dB.	−5 dB on ME-30B/U.
4	Change modulation to off and switch to cw.	Same as step 1	Observe ME-30B/U scale for deviation.	Deviation: 3 db max (−3.5 to −6.5 dB).
5	Rf level: −90 dBm	Same as step 1	Set signal generator to −90 dBm and observe ME-30B/U.	Deviation: 3 dB max (−3.5 to −6.5 dB).
6	Rf level: −90 dBm MODULATION SELECTOR: 1 kHz	Same as step 1	Check −5-dB reference point on ME-30B/U.	If −5-dB reference point remains the same, proceed to step 10. If not, proceed to step 7.
7			Adjust GAIN RF/IF control until −5-dB reference point is reestablished.	
8	Change output to cw		Observe ME-30B/U indication.	Deviation: 3 dB max (−3.5 to −6.5 dB).
9			Repeat steps 6, 7, and 8 until −5-dB reference point is re-established.	
10	Same as step 8		Observe ME-30B/U indication.	Deviation: 3 dB max (−3.5 to −6.5 dB).
11	Rf output level: −50 dBm	Same as step 1	Observe ME-30B/U indication.	Deviation: 3 dB max (−3.5 to −6.5 dB).
12	Same as step 11	Same as step 1	Repeat steps 6 through 8.	Deviation: 3 dB max (−3.5 to −6.5 dB).
13	Output level control to −10 dBm.	Same as step 1	Observe ME-30B/U indication.	Deviation: 3 dB max (−3.5 to −6.5 dB).
14	Same as step 6	Same as step 1	Repeat steps 6 through 8.	Deviation: 3 dB max (−3.5 to −6.5 dB).
15	Frequency: 15.5 MHz	Same as step 1	Repeat steps 2 through 14 at new input frequency.	Deviation: 3 dB max (−3.5 to −6.5 dB).
16	Frequency: 30.5 MHz	Same as step 1	Repeat steps 2 through 14 at new input frequency.	Deviation: 3 dB max (−3.5 to −6.5 dB).

d. IF Rejection Test.

(1) *Test connections.* Connect equipment as shown in figure 8-18 and explained in *a*(3) above.

(2) *Test conditions.* Be sure that the ME-30B/U does not pick up stray electromagnetic interference. Check all shields and grounds for good connections.

Step No.	Test equipment	Control settings: Equipment under test	Test procedure	Performance standard
1	Signal generator: Frequency: 40 MHz MODULATION SELECTOR: 1 kHz	HF receiver: Tune rf to 30 MHz. ANL control: OFF SELECT switch: 6 KC BFO control: off AM CW-SSB switch: AM GAIN RF/IF control: Maximum cw	Turn on equipment and allow a minimum 10-minute warmup.	
2	.....	.....	Adjust signal generator control and HF receiver GAIN RF/IF controls to obtain 10-dB change on ME-30B/U.	Note change in ME-30B/U scale readings for 10-dB requirement.
3	Same as step 1	Same as step 1	Calculate IF rejection by subtracting rf signal level indicated on the signal generator attenuation control from receiver sensitivity (b above, step 7).	IF rejection: 75 dB minimum above sensitivity recorded in *b*(2) above, step 7.
4	Tune rf output to 2.5 MHz.	Same as step 1	Same as step 3	Same as step 3.
5	Tune rf output to 455 kHz.	Same as step 1	Same as step 4	Same as step 4.
6	Tune rf output to 40 MHz.	Tune HF receiver to 10.5 MHz.	Same as step 3	Same as step 3.
7	Tune rf output to 2.5 MHz.	Same as step 6	Same as step 3	Same as step 3.
8	Tune rf output to 455 kHz.	Same as step 6	Same as step 3	Same as step 3.
9	Tune rf output to 40 MHz.....	Tune HF receiver to 20.5 MHz..	Same as step 3	Same as step 3.
10	Tune rf output to 2.5 MHz.....	Same as step 9	Same as step 3	Same as step 3.
11	Tune rf output to 455 kHz.....	Same as step 9	Same as step 3	Same as step 3.
12	Tune rf output to 40 MHz.....	Tune HF receiver to 30.5 MHz..	Same as step 3	Same as step 3.
13	Tune rf output to 2.5 MHz.....	Same as step 12	Same as step 3	Same as step 3.
14	Tune rf output to 455 kHz.....	Same as step 12	Same as step 3	Same as step 3.

e. IF Bandwidth Selectivity Test.

(1) *Test connections.* Connect equipment as shown in figure 8-18 and explained in *a*(3) above.

(2) *Test conditions.* Be sure that the ME-30B/U does not pick up stray electromagnetic interference. Check all shields and grounds for good connections. Be sure to check calibration of signal generator prior to performance of these tests.

Step No.	Test equipment	Control settings: Equipment under test	Test procedure	Performance standard
1	Signal generator: RANGE switch: 530-1800 KC MODULATION SELECTOR switch: INT 1000 MODULATION AMPLITUDE control: 30% ATTENUATOR switch: -110 Attenuator VERNIER control: -5 on meter.	HF receiver: MC TUNING: as given in steps below. KC TUNING: as given in steps below. AGC switch: FAST C.O.R. SENS: OFF ANL control: OFF SELECT switch: as given in steps below. BFO control: off AM CW-SSB switch: AM GAIN RF/IF: adjust for 0 dB on ME-30B/U.	Turn the equipment power on and warm up for at least 10 minutes.	
2	Frequency: 1500 kHz	SELECT switch: 12 KC MC TUNING: 1 MC KC TUNING: 5000 KC	Tune signal generator frequency control below and above 1500 kHz until voltmeter indicates −3 dBm. Note frequency at these half-power points.	1494 to 1506 kHz (1.494 to 1.506 MHz) for 12-kc bandwidth.
3	Same as step 2	SELECT switch: 6 KC	Same as step 2	1497 to 1503 kHz (1.497 to 1.503 MHz) for 6-kc bandwidth.
4	Same as step 2	SELECT switch: 3 KC	Same as step 2	1498.5 to 1501.5 kHz (1.4985 to 1.5015 MHz) for this bandwidth.
5	Same as step 2	SELECT switch: 1.5 KC	Same as step 2	1499.75 to 1500.75 kHz for this bandwidth.
6	Same as step 2	SELECT switch: .5 KC	Same as step 2 (Use VERNIER tuning control.)	1499.25 to 1500.25 kHz for this bandwidth.
7	Frequency: 10.5 MHz RANGE switch: 5.8-19.2 MC	SELECT switch: 12 KC MC TUNING: 10 MC KC TUNING: 5000 KC	Tune signal generator frequency control below and above 10.5 MHz until the ME-30B/U indicates −3 dBm at these half-power points.	10.4994 to 10.5006 MHz for 12-kc bandwidth.
8	Same as step 7	SELECT switch: 6 KC	Same as step 7	10.4997 to 10.5003 MHz.
9	Same as step 7	SELECT switch: 3 KC	Same as step 7	10.4998.5 to 10.5001.5 MHz.
10	Same as step 7	SELECT switch: 1.5 KC	Same as step 7	10.4999.25 to 10.5000.75 MHz.
11	Same as step 7	SELECT switch: .5 KC	Same as step 7 (Use VERNIER tuning control.)	10.4999.75 to 10.5000.25 MHz.
12	Frequency: 20.5 MHz RANGE switch: 19-65 MC	SELECT switch: 12 KC	Tune signal generator frequency control below and above 20.5 MHz until ME-30B/U indicates −3 dBm at these half-power points.	20.4994 to 20.5006 MHz for 12-kc bandwidth.
13	Same as step 12	SELECT switch: 6 KC	Same as step 12	20.4997 to 20.5003 MHz.
14	Same as step 12	SELECT switch: 3 KC	Same as step 12	20.4998.5 to 20.5001.5 MHz.
15	Same as step 12	SELECT switch: 1.5 KC	Same as step 12	20.4999.25 to 20.5000.75 MHz.
16	Same as step 12	SELECT switch: .5 KC	Same as step 12 (Use VERNIER tuning control.)	20.4999.75 to 20.5000.25 MHz.
17	Frequency: 30.5 MHz	SELECT switch: 12 KC	Tune signal generator below and above 30.5 MHz until ME-30-B/U indicates −3 dBm at these half-power points.	30.4994 to 30.5006 MHz.
18	Same as step 17	SELECT switch: 6 KC	Same as step 17	30.4997 to 30.5003 MHz.
19	Same as step 17	SELECT switch: 3 KC	Same as step 17	30.4998.5 to 30.5001.5 MHz.
20	Same as step 17	SELECT switch: 1.5 KC	Same as step 17	30.4999.25 to 30.5000.75 MHz.
21	Same as step 17	SELECT switch: .5 KC	Same as step 17	30.4999.75 to 30.5000.25 MHz.

f. Audiofrequency Distortion Test.

(1) *Test connections.* Connect equipment as shown in figure 8-18. Remove shielded cable from input binding posts of ME-30B/U and connect to AF INPUT binding posts of Spectrum Analyzer TS-723/U.

(2) *Test conditions.* Allow at least 10 minutes warmup time for the test equipment before performing the tests. Check all shields and grounds to insure that the equipment does not pick up stray electromagnetic fields which may interfere with the results of the tests.

Step No.	Test equipment	Control settings: Equipment under test	Test procedure	Performance standard
1	Signal generator: RANGE switch: 5.8-19.2 MC Frequency: 15.5 MHz MODULATION SELECTOR switch: INT 1000 MODULATION AMPLITUDE control: 100% ATTENUATOR switch:–90 Attenuator VERNIER control: 0 dBm on meter. Spectrum analyzer: AF RF selector switch: AF Spectrum analyzer: RANGE switch: X10 FUNCTION switch: SET LEVEL METER RANGE switch: 3%-10.30 FREQUENCY control: 100 on tuning dial INPUT control: midrange	HF receiver: MC TUNING control: 15 MC KC TUNING control: 5000 KC AGC switch: OFF ANL control: OFF SELECT switch: 12 KC BFO control: off AM CW-SSB switch: AM GAIN RF/IF control: midscale C.O.R. SENS: OFF	Turn the equipment power on and allow 10 minute warmup.	
2	Spectrum analyzer: METER RANGE switch: 100% Signal generator: Same as step 1.	Same as step 1	Rotate INPUT control until meter pointer reaches full scale on TS-723A/U	Spectrum analyzer meter shall show a 100% indication with signal generator at 1000-Hz modulation.
3	Spectrum analyzer: FUNCTION switch: DISTORTION Signal generator: Same as step 1.	Same as step 1	Adjust COARSE frequency control on spectrum analyzer until meter drops sharply. Adjust FINE frequency control until maximum dip in meter is reached. Rotate METER RANGE switch as needed to obtain final reading. Adjust BALANCE control to finalize the minimum meter reading.	The percentage of distortion read on the top scale of the meter shall not be greater than 8%.

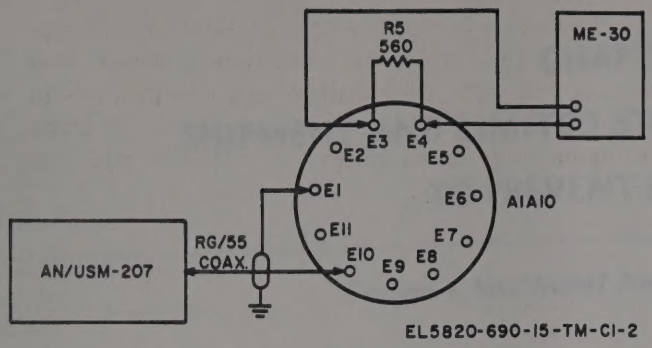

Figure 8-19. 1-MHz reference oscillator test, test connections.

g. 1-MHz Crystal Reference Oscillator Test.

(1) *Test connections.* Remove receiver chassis unit from cabinet. Connect ME-30B/U to terminals E3 and E4 on bottom of 1-MHz oscillator. Connect Digital Readout Electronic Counter AN/USM-207 to E1 and E10 on bottom of 1-MHz oscillator (fig. 8-19).

(2) *Test conditions.* Allow at least a 20-minute warmup for the HF receiver and test equipment prior to making measurements.

Step No.	Test equipment	Control settings: Equipment under test	Test procedure	Performance standard
1	Electronic counter: DISPLAY control: midscale SENSITIVITY switch: 1 volt GATE TIME (SEC-1):-10^4 FUNCTION switch: FREQ	HF receiver: Set controls as given in step 1, paragraph 8-25*b*.	Observe reading on ME-30B/U and on the AN/USM-207.	Signal voltage: .5 volt min. Frequency: 1±0.5 MHz.

CHAPTER 9

SHIPMENT AND LIMITED STORAGE AND DEMOLITION TO PREVENT ENEMY USE

Section I. SHIPMENT AND LIMITED STORAGE

9-1. Disassembly of Equipment

To prepare the HF receiver for shipment and storage:

a. Remove all cables connected to the back panel.

b. Remove the HF receiver from the rack or cabinet in which it is mounted.

9-2. Repackaging for Shipment or Limited Storage

Packaging and packing for shipment or limited storage will be performed by personnel engaged in a higher maintenance category activity, if required packing and packaging tools/materials are not available at organizational maintenance.

a. The HF receiver is ready for packaging when removed from the rack assembly. All components of the HF receiver are shipped in place within the unit.

b. Place the HF receiver in a close-fitting carton, and then seal the carton in a moisture-vaporproof barrier.

c. Pack the sealed carton in a wooden shipping container lined with shock-absorbent material. Seal the instruction manuals for the HF receiver in the moisture-vaporproof barrier bag, and place them in the shipping container.

d. Nail the shipping container closed, and secure it with metal bands.

Section II. DEMOLITION OF MATERIEL TO PREVENT ENEMY USE

9-3. Authority for Demolition

Demolition of the equipment will be accomplished only upon the order of the commander. The demolition procedures outlined in paragraph 9-4 will be used to prevent further use of the equipment.

9-4. Methods of Destruction

Use any of the following methods to destroy the equipment.

a. Smash. Smash the controls, tubes, coils, switches, capacitors, transformers, and other components; use sledges, axes, handaxes, pickaxes, hammers, or crowbars.

b. Cut. Cut the output and power cables and slash the wiring harness; use axes, handaxes, or matchetes.

WARNING

Be extremely careful with explosives and incendiary devices. Use these items only when the need is urgent.

c. Burn. Burn cards and technical manuals; use gasoline, kerosene, oil, flamethrowers, or incendiary grenades.

d. Bend. Bend the panel and cabinet.

e. Explode. If explosives are necessary, use firearms, grenades, or TNT.

f. Dispose. Bury or scatter destroyed parts in slit trenches or foxholes, or throw them into streams.

APPENDIX A

REFERENCES

Following is a list of applicable references that should be available to the operator and maintenance personnel of Receiver, Radio R-1421A/URR:

DA Pam 310-4	Index of Technical Manuals, Technical Bulletins, Supply Manuals (types 7, 8, and 9), Supply Bulletins, and Lubrication Orders.
DA Pam 310-7	U.S. Army Equipment Index of Modification Work Orders.
SB 38-100	Preservation, Packaging, and Packing Materials, Supplies, and Equipment Used by the Army.
SC 5180-91-CL-R13	Tool Kit, Operations Central TK-101/G.
SC 5180-91-CL-S21	Tool Kit, Electronic Equipment TK-100/G.
TB 746-10	Field Instructions for Painting and Preserving Electronics Command Equipment.
TM 11-5965-269-50	Depot Maintenance Manual: Headsets P-11, P-18, P-19, P-20, P-21, P-23, H-16/U, H-32, H-65/U, H-113/U, HS-16, HS-29, HS-30, HS-33, and HS-38.
TM 11-6625-200-15	Operator Organizational, DS, GS, and Depot Maintenance Manual: Multimeters ME-26A/U, ME-26B/U, ME-26C/U, and ME-26D/U.
TM 11-6625-320-12	Operator and Organizational Maintenance Manual: Voltmeter, Meter ME-30A/U and Voltmeters, Electronic ME-30B/U, ME-30C/U, and ME-30E/U.
TM 11-6625-366-15	Organizational, DS, GS, and Depot Maintenance Manual: Multimeter TS-352B/U.
TM 11-6625-524-14	Operator, Organizational and Field Maintenance Manual: Voltmeter, Electronic AN/URM-145.
TM 11-6625-524-15-1	Operator, Organizational, DS, GS, and Depot Maintenance Manual: Electronic Voltmeter AN/URM-145.
TM 11-6625-535-15	Operator, Organizational, DS, GS, and Depot Maintenance Manual: Oscilloscope AN/USM-140A.
TM 11-6625-573-15	Operator, Organizational, DS, GS, and Depot Maintenance Manual: Signal Generator AN/GRM-50.
TM 11-6625-683-15	Operator, Organizational, Direct Support, General Support, and Depot Maintenance Manual: Signal Generator AN/URM-127.
TM 11-6625-700-10	Operator's Manual: Digital Readout, Electronic Counter AN/USM-207.
TM 11-6625-700-25	Organizational, DS, GS, and Depot Maintenance Manual: Digital Readout, Electronic Counter AN/USM-207.
TM 11-6625-1599-15	Operator's and Organizational Maintenance Manual: Sweep Frequency Generator AN/USM-203.
TM 38-750	Army Equipment Record Procedures.

APPENDIX B

BASIC ISSUE ITEMS LIST

SECTION I. INTRODUCTION

B-1. Scope

This appendix lists items which accompany the Receiver Radio R-1421/URR or are required for installation, operation, or operator's maintenance.

B-2. General

This basic issue items list is divided into the following sections:

a. Basic Issue Items, Section II. A list of items which accompany the R-1421/URR and are required by the operator/crew for installation, operation, or maintenance.

b. Maintenance and Operating Supplies, Section III. Not applicable.

B-3. Explanation of Columns

The following provides an explanation of columns in the tabular list of basic issue items, section II.

a. Source, Maintenance, and Recoverability Codes (SMR), Column 1.

(1) Source code, indicates the selection status and source for the listed item. Source codes are —

Code	*Explanation*
A	Assemblies which are not procured or stocked as such, but are made up of two or more units. Such component units carry individual stock numbers and descriptions, are procured and stocked separately and can be assembled to form the required assembly at indicated maintenance categories.
X	Parts and assemblies which are not procured or stocked and the mortality of which normally is below that of the applicable end item or component. The failure of such part or assembly should result in retirement of the end item from the supply system.
X1	Repair parts which are not procured or stocked. The requirement for such items will be filled by use of the next higher assembly or component.
X2	Repair parts which are not stocked. The indicated maintenance category requiring such repair parts will attempt to obtain same through cannibalization. Where such repair parts are not obtainable through cannibalization, requirements will be requisitioned with accompanying justification, through normal supply channels.
P	Repair parts which are stocked in or supplied from the GSA/DSA, or Army supply system and authorized for use at indicated maintenance categories.
P2	Repair parts which are procured and stocked for insurance purposes because the combat or military essentiality of the end item dictates that a minimum quantity be available in the supply system.
P9	Assigned to items which are NSA design controlled: unique repair parts, special tools, test, measuring and diagnostic equipment, which are stocked and supplied by the Army COMSEC logistic system, and which are subject to the provisions of AR 380-41.
P10	Assigned to items which are NSA design controlled: special tools, test, measuring and diagnostic equipment for COMSEC support, which are accountable under the provisions of AR 380-41.
M	Repair parts which are not procured or stocked, but are to be manufactured in indicted maintenance levels.
C	Repair parts authorized for local procurement. Where such repair parts are not obtainable from local procurement, requirements will be requisitioned through normal supply channels accompanied by a supporting statement of nonavailability from local procurement.
G	Major assemblies that are procured with PEMA funds for initial issue only as exchange assemblies at DSU and GSU level. These assemblies will not be stocked above DS and GS level or returned to depot supply level.

(2) Maintenance codes, indicates the lowest category of maintenance authorized to install the listed item. The maintenance level code is —

Code	*Explanation*
C	Operator/Crew

(3) Recoverability code indicates whether unserviceable items should be returned for recovery or salvage. Items not coded are expendable. Recoverability codes are —

Code	*Explanation*
R	Repair parts and assemblies that are economically repairable at DSU and GSU activities and are normally furnished by supply on an exchange basis.
S	Repair parts and assemblies which are economically repairable at DSU and GSU activities and which normally are furnished by supply on an exchange basis. When items are determined by a GSU to be uneconomically repairable, they will be evacuated to a depot for evaluation and analysis before final disposition.
T	High dollar value recoverable repair parts which are subject to special handling and are issued on an exchange basis. Such repair parts normally are repaired or overhauled at depot maintenance activities.
U	Repair parts specifically selected for salvage by reclamation units because of precious metal content, critical materials, or high dollar value reusable casings or castings.

b. Federal Stock Number, Column 2. This column indicates the Federal stock number assigned to the items and will be used for requisitioning purposes.

c. Description, Column 3. This column indicates the Federal item name and any additional description of the item required. A part number or other reference number is followed by the applicable five-digit Federal supply code for manufacturers in parentheses.

d. Unit of Measure (U/M), Column 4. A 2 character alphabetic abbreviation indicating the amount or quantity of the item upon which the allowances are based, e.g., ft, ea, pr, etc.

e. Quantity Incorporated in Unit, Column 5. This column indicates the quantity of the item used in the R-1421/URR A"V" appearing in this column in lieu of a quantity indicates that a definite quantity cannot be indicated (e.g., shims, spacers, etc.).

f. Quantity Furnished with Equipment, Column 6. This column indicates the quantity of an item furnished with the equipment.

g. Illustration, Column 7. Not applicable.

B-4. Explanation of Columns in the Tabular List of Maintenance and Operating Supplies, Section III

Not applicable.

B-5. Federal Supply Codes for Manufacturers

Code	*Manufacturer*
93346	American Electronic Laboratories, Inc.
97823	Shelley Products, Ltd.

SECTION II. BASIC ISSUE ITEMS

(1) SMR CODE	(2) FEDERAL STOCK NUMBER	(3) DESCRIPTION Reference Number & Mfr Code — USABLE ON CODE	(4) UNIT OF MEAS	(5) QTY INC IN UNIT	(6) QTY FURN WITH EQUIP	(7) ILLUSTRATIONS (a) FIG. NO.	(7) ILLUSTRATIONS (b) ITEM NO. OR REFERENCE DESIGNATION
A-O-R	5820-946-3387	RECEIVER, RADIO R1421/URR; (This item is nonexpendable)					
		TECHNICAL MANUAL TM 11-5820-690-15	EA	1	1		
		Requisition through pinpoint account number if assigned; otherwise through nearest Adjutant General facility.					
		A quantity of 1 technical manual is packed with each equipment. Where a valid need exists, additional copies may be requisitioned and kept on hand.					
P-O--		LAMP INCANDESCENT: BEP74; (97823)	EA	1	1		
P-O--	6240-933-1442	LAMP, INCANDESCENT: BEP62; (97823)	EA	1	1		
P-O--	5960-057-5288	ELECTRON TUBE; 6DS4; (93346)	EA	2	1		
		NO ACCESSORIES, TOOLS OR TEST EQUIPMENT ARE TO BE ISSUED WITH THIS EQUIPMENT.					
		NO BASIC ISSUE ITEMS ARE MOUNTED IN OR ON THIS EQUIPMENT.					

APPENDIX C

MAINTENANCE ALLOCATION

Section I. INTRODUCTION

C-1. General

This appendix provides a summary of the maintenance operations covered in the equipment literature for Receiver, Radio R-1421/URR. It authorizes categories of maintenance for specific maintenance functions on repairable items and components and the tools and equipment required to perform each function. This appendix may be used as an aid in planning maintenance operations.

C-2. Maintenance Functions

Maintenance functions will be limited to and defined as follows:

a. Inspect. To determine serviceability of an item by comparing its physical, mechanical, and electrical characteristics with established standards.

b. Test. To verify serviceability and to detect incipient electrical or mechanical failure by use of special equipment such as gages, meters, etc. This is accomplished with external test equipment and does not include operation of the equipment and operator type tests using internal meters or indicating devices.

c. Service. To clean, to preserve, to charge, and to add fuel, lubricants, cooling agents, and air. If it is desired that elements, such as painting and lubricating, be defined separately, they may be so listed.

d. Adjust. To rectify to the extent necessary to bring into proper operating range.

e. Align. To adjust two or more components or assemblies of an electrical or mechanical system so that their functions are properly synchronized. This does not include setting the frequency control knob of radio receivers or transmitters to the desired frequency.

f. Calibrate. To determine the corrections to be made in the readings of instruments or test equipment used in precise measurement. Consists of the comparison of two instruments, one of which is a certified standard of known accuracy, to detect and adjust any discrepancy in the accuracy of the instrument being compared with the certified standards.

g. Install. To set up for use in an operational environment such as an encampment, site, or vehicle.

h. Replace. To replace unserviceable items with serviceable like items.

i. Repair. To restore an item to serviceable condition through correction of a specific failure or unserviceable condition. This function includes, but is not limited to welding, grinding, riveting, straightening, and replacement of parts other than the trial and error replacement of running spare type items such as fuses, lamps, or electron tubes.

j. Overhaul. Normally, the highest degree of maintenance performed by the Army in order to minimize time work in process is consistent with quality and economy of operation. It consists of that maintenance necessary to restore an item to completely serviceable condition as prescribed by maintenance standards in technical publications for each item of equipment. Overhaul normally does not return an item to like new, zero mileage, or zero hour condition.

k. Rebuild. The highest degree of materiel maintenance. It consists of restoring equipment as nearly as possible to new condition in accordance with original manufacturing standards. Rebuild is performed only when required by operational considerations or other paramount factors and then only at the depot maintenance category. Rebuild reduces to zero the hours or miles the equipment, or component thereof, has been in use.

1. *Symbols.* The uppercase letter placed in the appropriate column indicates the lowest level at which that particular maintenance function is to be performed.

C-3. Explanation of Format

a. Column 1, Group Number. Not applicable.

b. Column 2, Functional Group. Column 2

lists the noun names of components, assemblies, subassemblies and modules on which maintenance is authorized.

c. Column 3, Maintenance Functions. Column 3 lists the maintenance category at which performance of the specific maintenance function is authorized. Authorization to perform a function at any category also includes authorization to perform that function at higher categories. The codes used represent the various maintenance categories as follows:

Code	*Maintenance Category*
C	Operator/crew
O	Organizational maintenance
F	Direct support maintenance
H	General support maintenance
D	Depot maintenance

d. Column 4, Tools and Test equipment. Column 4 specifies, by code, those tools and test equipment required to perform the designated function. The numbers appearing in this column refer to specific tools and test equipment which are identified in table C-1.

e. Column 5, Remarks. Self-Explanatory.

C-4. Explanation of Format of Table I, Tool an Test Equipment Requirements

The columns in table C-1 are as follows:

a. Tools and Equipment. The numbers i this column coincide with the numbers used in the tools and equipment column of the maintenance allocation chart. The numbers indicate the applicable tool for the maintenance function.

b. Maintenance Category. The codes in this column indicate the maintenance category normally allocated the facility.

c. Nomenclature. This column lists tools, test, and maintenance equipment required to perform the maintenance functions.

d. Federal Stock Number. This column lists the Federal stock number of the specific tool or test equipment.

e. Tool Number. Not used.

☆U.S. GOVERNMENT PRINTING OFFICE: 1972-769609/98

SECTION II. MAINTENANCE ALLOCATION CHART

GROUP NUMBER	COMPONENT ASSEMBLY NOMENCLATURE	MAINTENANCE FUNCTIONS											TOOLS AND EQUIPMENT	REMARKS
		INSPECT	TEST	SERVICE	ADJUST	ALIGN	CALIBRATE	INSTALL	REPLACE	REPAIR	OVERHAUL	REBUILD		
	RECEIVER RADIO R-1421/URR	C	F			F			O	F	D		1-12	
	OSCILLATOR CRYSTAL		F						F	F	D		2, 7, 9, 11	
	PC BOARDS		F						F	F	D		8, 11	
	TUBE ELECTRON								O					

Table C-1. Tool and Test Equipment Requirements

TOOLS AND EQUIPMENT	MAINTENANCE CATEGORY	NOMENCLATURE	FEDERAL STOCK NUMBER	TOOL NUMBER
1	F, H, D	ATTENUATOR, VARIABLE CN-796( )/U	5985-831-5991	
2	F, H, D	ELECTRONIC COUNTER AN-USM-207	6625-911-6368	
3	F, H, D	GENERATOR SET RF, AN-URM-25	6625-309-5381	
4	F, H, D	GENERATOR SIGNAL AN/USM-44	6625-669-4031	
5	F, H, D	GENERATOR SIGNAL AN/URM-127	6625-783-5965	
6	F, H, D	GENERATOR SIGNAL AN/USM-203	6625-086-7165	
7	F, H, D	MULTIMETER ME-26	6625-646-9409	
8	O, F, H, D	MULTIMETER TS-352	6625-553-0142	
9	F, H, D	OSCILLOSCOPE AN/USM-140	6625-987-6603	
10	F, H, D	TOOL KIT TK-100	5180-605-0079	
11	O, F, H, D	TOOL KIT TK-105	5180-610-8177	
12	F, H, D	VOLTMETER, ELECTRONIC AN/URM-145	6625-973-3986	

INDEX

	Paragraph	Page
Alignment and testing:		
Subassembly:		
Audio amplifier	8-15	8-17
Automatic gain control (agc)	8-13	8-17
Beat frequency oscillator and generators	8-14	8-17
Carrier-operated relay (c.o.r.) amplifier	8-16	8-18
1st local oscillator	8-23	8-20
1st local oscillator coil frequency settings	8-5*b*	8-5
40-MHz IF amplifier and 2d mixer	8-6	8-7
Harmonic generator and mixer	8-8	8-8
IF and agc (3d)	8-13	8-17
IF bandwidth (3d)	8-12	8-16
1-MHz crystal reference oscillator	8-7	8-8
Power supply	8-17, 8-19	8-19
Preamplifier and band selector assembly	8-4	8-4
2d IF amp and 3d mixer unit	8-10	8-14
3d IF and automatic gain control	8-13	8-17
37.5-MHz L.O. amplifier	8-9	8-13
Variable frequency oscillator	8-11	8-15
Audio Amplifier A1A7:		
Alignment and test	8-15	8-17
Circuit functioning	6-5*k*	6-18
Removal and replacement	7-18	7-56
Troubleshooting	7-5*b*, 7-5*d*, 7-6*b*	7-4—7-7 7-8
Automatic gain control (agc) A1A5A2:		
Alignment and testing	8-13	8-17
Circuit functioning	6-5*i* (2)	6-18
Troubleshooting	7-5*b*, 7-5*d*, 7-6*b*	7-4—7-7 7-8
Beat frequency oscillator (bfo) A1A6:		
Alignment and test	8-14	8-17
Circuit functioning	6-5*j*	6-18
Removal and replacement	7-17	7-54
Troubleshooting	7-5*b*, 7-5*d*, 7-6*b*	7-4—7-7 7-8
Carrier-operated relay (c.o.r.) amplifier A1A12:		
Alignment and test	8-16	8-18
Circuit functioning	6-5*l*	6-19
Removal and replacement	7-22	7-61
Troubleshooting	7-5*b*, 7-5*d*, 7-6*b*	7-4—7-7 7-8
Circuit functioning:		
Audio amplifier	6-5*k*	6-18
Automatic gain control amplifier	6-5*i*(2)	6-18
Beat frequency oscillator	6-5*j*	6-18
Carrier-operated relay	6-5*l*	6-18
40-MHz IF amplifier and 2d mixer	6-5*b*	6-10
4- to 34-MHz filter	6-5*e*(2)	6-12
Gear block	6-5*g*(1)	6-14
Harmonic generator and mixer	6-5*e*	6-10
Harmonic mixer A1A2A4	6-5*e*(4)	6-12
Harmonic mixer driver	6-5*e*(3)	6-12
IF and agc (3d)	6-5*i*	6-18
IF bandwidth selector (3d)	6-5*h*	6-16
100-kHz marker generator	6-5*d*	6-10
1-MHz reference oscillator	6-5*c*	6-10
Power supply	6-5*m*	6-20
Preamplifier and band selector assembly	6-5*a*	6-4
2d IF amplifier and 3d mixer	6-5*e*(2)	6-12
2d IF tuning	6-5*g*	6-14
Spectrum generator	6-5*e*(1)	6-10
3d IF amplifier	6-5*e*(1)	6-10
37.5-MHz L.O. amplifier	6-5*f*	6-12
Variable frequency oscillator	6-5*g*(3)	6-16
Cleaning	4-8	4-2
Controls and indicators:		
Front panel	3-2	3-1
Rear panel	3-3	3-3
Destruction of equipment	9-4	9-1
Differences, models	1-7	1-3
Equipment performance checklist	7-3*b*(4)	7-2
Equipment performance test	7-3*b*(3)	7-2
1st local oscillator A4A3:		
Alignment and test	8-23	8-20
Troubleshooting	7-5*b*, 7-6*b*, 7-9*g*	7-4, 7-8 7-36
40-MHz IF amplifier and 2d mixer:		
Alignment and test	8-6	8-7
Circuit functioning	6-5*b*	6-10
Remove and replace	7-15	7-48
Troubleshooting	7-5*b*, 7-5*d*, 7-6*b*	7-4—7-7 7-8
4- to 34-MHz filter A1A2A2:		
Circuit functioning	6-5*e*(2)	6-12
Front panel A2:		
Removal and replacement	7-9	7-20
Gear block A3MP1, circuit functioning	6-5*g*(1)	6-14
Functioning, circuits	6-1, 6-3	6-1, 6-2

	Paragraph	Page
Harmonic generator and mixer A1A2:		
Alignment and test	8-8	8-8
Circuit functioning	6-5*e*	6-10
Removal and replacement	7-14	7-48
Troubleshooting	7-5*b*, 7-5*d*, 7-6*b*	7-4—7-7, 7-8
Harmonic mixer A1A2A4:		
Circuit functioning	6-5*e*(4)	6-12
Troubleshooting	7-5*b*, 7-5*d*, 7-6*b*	7-4—7-7, 7-8
Harmonic mixer driver A1A2A3:		
Circuit functioning	6-5*e*(3)	6-12
IF amplifier (2d) and 3d mixer A3A1:		
Alignment and test	8-10	8-14
Circuit functioning	6-5*g*(2)	6-16
Removal and replacement	7-10	7-36
Troubleshooting	7-5*b*, 7-5*d*, 7-6*b*, 8-9*e*	7-4—7-7, 7-8, 8-13
IF amplifier (3d) A1A5A1:		
Alignment and test	8-13	8-17
Circuit functioning	6-5*i*(1)	6-18
Troubleshooting	7-5*b*, 7-5*d*, 7-6*b*	7-4—7-7, 7-8
IF and agc (3d) A1A5:		
Alignment and test	8-13	8-17
Circuit functioning	6-5*i*	6-18
Removal and replacement	7-16	7-49
Troubleshooting	7-5*b*, 7-5*d*, 7-6*b*	7-4—7-7, 7-8
IF bandwidth selector (3d) A1A4:		
Alignment and test	8-12	8-16
Circuit functioning	6-5*h*	6-16
Removal and replacement	7-12	7-42
IF tuning (2d) A3:		
Circuit functioning	6-5*g*	6-14
Removal and replacement	7-10	7-36
Installation:		
Checking unpacked equipment	2-2	2-2
Installation, equipment	2-4	2-2
Placement, equipment	2-3	2-2
Unpacking	2-1	2-1
Introduction:		
Description, HF receiver	1-6	1-2
Differences, models	1-7	1-3
Forms and records	1-3	1-1
Indexes of publications	1-2	1-1
Purpose and use	1-4	1-2
Reference designations	1-8	1-3
Scope	1-1	1-1
Technical characteristics	1-5	1-2
Lubrication	4-10	4-3
Maintenance:		
Operator:		
Cleaning	4-8	4-2
Daily preventive checks and services chart	4-6	4-1
Maintenance—Continued		
General troubleshooting information	4-11	4-3
Lubrication	4-10	4-3
Preventive	4-4	4-1
Preventive checks and services periods	4-5	4-1
Repairs and adjustments	4-14	4-3
Scope	4-1	4-1
Tools and equipment	4-3	4-1
Touchup painting instructions	4-9	4-3
Troubleshooting correction failure	4-12	4-3
Typical duties	4-2	4-1
Weekly preventive checks and services chart	4-7	4-2
Organizational:		
Preventive	5-3	5-1
Quarterly preventive checks and services chart	5-4	5-1
Repairs and adjustments	5-7	5-3
Scope	5-1	5-1
Tools, materials, and test equipment required	5-2	5-1
Troubleshooting	5-5	5-2
Troubleshooting chart	5-6	5-2
1-MHz crystal reference oscillator A1A10:		
Alignment and test	8-7	8-8
Circuit functioning	6-5*c*	6-10
Troubleshooting	7-5*b*, 7-5*d*, 7-6*b*	7-4—7-7, 7-8
100-kHz marker generator:		
Circuit functioning	6-5*d*	6-10
Removal and replacement	7-13	7-47
Troubleshooting	7-5*b*, 7-5*d*, 7-6*b*	7-4—7-7, 7-8
Operation:		
Controls and indicators	3-2, 3-3	3-1, 3-3
Conditions	3-4	3-3
In desert climates	3-11	3-5
Preliminary starting procedure	3-5	3-4
Procedure	3-8	3-4
Starting procedure	3-6	3-4
Stopping procedure	3-9	3-4
Tuning procedure	3-7	3-4
Types	3-4	3-3
Under tropical conditions	3-10	3-5
Under unusual conditions	3-10	3-5
Painting	5-6	5-2
Power supplies A1A8 and A1A9:		
Alignment and test	8-17	8-19
Circuit functioning	8-19	8-19
Troubleshooting	7-5*b*, 7-5*d*, 7-6*b*	7-4—7-7, 7-8
Preamplifier and band selector assembly A4:		
Alignment and test	8-4	8-4
Circuit functioning	6-5*a*	6-4

	Paragraph	Page
Preamplifier and band selector assembly A4—Continued		
Gain and 3-db bandwidth	7-10*d*	7-39
Grid and plate coils	8-3*l*	8-3
Removal and replacement	7-11	7-40
Troubleshooting	7-5*b*, 7-5*d*, 7-6*b*, 7-9*h*, 7-10*e*	7-4—7-7, 7-8, 7-36, 7-39
Voltage and resistance chart	7-10*e*	7-39
Rear panel A5, removal and replacement	7-23	7-63
Receiver, Radio R-1421A/URR:		
Alignment	8-3—8-23	8-2—8-20
Functioning, circuit	6-1	6-1
Installation	2-1—2-4	2-2
Packing and unpacking	2-1	2-1
Purpose and use	1-4	1-2
Technical characteristics	1-5	1-2
Rectifier and filter assembly A1A8, removal and replacement	7-20	7-59
Reference designations, receiver, Radio R-1421A/URR	1-8	1-3
Regulator board A1A9, removal and replacement	7-19	7-59
Removal and replacement:		
Audio amplifier	7-18	7-56
Beat frequency oscillator	7-17	7-54
Carrier-operated relay amplifier	7-22	7-61
40-MHz IF amplifier and 2d mixer	7-15	7-48
Front panel A2	7-9	7-20
Harmonic generator and mixer	7-10	7-36
IF and agc (3d)	7-16	7-49
IF band selector (3d)	7-12	7-42
IF tuning (2d)	7-10	7-36
100-kHz marker generator	7-13	7-47
Preamplifier and band selector assembly	7-11	7-40
Rear panel A5	7-23	7-63
Rectifier and filter assembly	7-20	7-59
Regulator board	7-19	7-59
2d IF amplifier and 3d mixer	7-10	7-36
37.5-MHz L.O. amplifier	7-21	7-60
Schematic diagrams:		
Audio amplifier, figure 6-14		6-19
Automatic gain control amplifier, figure 6-29		6-43
Beat frequency oscillator, figure 6-30		6-45
Carrier-operated relay amplifier, figure 6-15		6-20
40-MHz IF amplifier and 2d mixer, figure 6-24		6-33
4- to 34-MHz filter, figure 6-25		6-35
Front panel, figure 6-6		6-8

	Paragraph	Page
Schematic diagrams—Continued		
Harmonic generator and mixer, figure 6-25		6-35
Harmonic mixer, figure 6-25		6-35
Harmonic mixer driver, figure 6-25		6-35
IF and agc (3d), figure 6-28, 6-29		6-41, 6-43
100-kHz marker generator, figure 6-9		6-11
Power supply, figure 6-16, 6-17, 6-18, 6-19		6-21, 6-22, 6-23, 6-24
Preamplifier and band selector assembly, figure 6-23, 6-2, 6-3, 6-4, 6-5, 6-6, 6-7, 6-8		6-31, 6-5, 6-6, 6-6, 6-7, 6-8, 6-9, 6-9
2d IF amplifier and 3d mixer, figure 6-27		6-39
2d IF tuning, figure 6-27, 6-11, 6-12		6-14, 6-15
Spectrum generator, figure 6-25		6-35
3d IF amplifier, figure 6-28, 6-29		6-41, 6-43
3d IF bandwidth selector, figure 6-25		6-35
37.5-MHz L.O. amplifier, figure 6-26, 6-10		6-37
Variable frequency oscillator, figure 6-12		6-15
Shipment	9-1	9-1
Signal tracing	7-4	7-3
Soldering	7-27	7-70
Spectrum generator A1A2A1:		
Circuit functioning	6-5*e*(1)	6-10
Troubleshooting	7-5*b*, 7-5*d*, 7-6*b*	7-4—7-7, 7-8
Storage, limited	9-1	9-1
Testing:		
General	8-1	8-1
Purpose	8-1	8-1
Test equipment and tools required	7-3	7-1
37.5-MHz L.O. amplifier A1A11:		
Alignment and test	8-9	8-13
Circuit functioning	6-5*f*	6-12
Removal and replacement	7-21	7-60
Troubleshooting	7-5*b*, 7-5*d*, 7-6*b*, table 8-1	7-4—7-7, 7-8, 8-1
Troubleshooting:		
Audio amplifier	7-5*b*, 7-5*d*, 7-6*b*	7-4, 7-5, 7-8
Automatic gain control (agc)	7-5*b*, 7-5*d*, 7-6*b*	7-4, 7-5, 7-8
Beat frequency oscillator	7-5*b*, 7-5*d*, 7-6*b*	7-4, 7-6, 7-8

	Paragraph	Page
Troubleshooting—Continued		
1st Local oscillator	7-5*b*, 7-5*d*, 7-6*b*	7-4, 7-6 7-8
40-MHz IF amplifier and 2d mixer	7-5*b*, 7-5*d*, 7-6*b*	7-4, 7-5 7-8
General	7-1	7-1
Harmonic generator and mixer	7-5*b*, 7-5*d*, 7-6*b*	7-4, 7-6 7-8
Harmonic mixer	7-5*b*, 7-5*d*, 7-6*b*	7-4, 7-6 7-8
IF and agc (3d)	7-5*b*, 7-5*d*, 7-6*b*	7-4 7-8
100-kHz marker generator	7-5*b*, 7-5*d*, 7-6*b*	7-4, 7-7 7-8
1-MHz crystal reference oscillator	7-5*b*, 7-5*d*, 7-6*b*	7-4, 7-6 7-8
Organizational	5-11	
Power supply	7-5*b*, 7-5*d*, 7-6*b*	7-4 7-8
Preamplifier and band selector assembly	7-5*b*, 7-5*d*, 7-6*b*, 7-9*h*, 7-10*d*, 7-10*f*	7-4, 7-5 7-8, 7-36 7-39, 7-40
Scope	7-1	7-1
2d IF amplifier	7-5*b*, 7-5*d*, 7-6*b*	7-4, 7-5 7-8
Spectrum generator	7-5*b*, 7-5*d*, 7-6*b*	7-4, 7-6 7-8
Techniques	7-5	7-4
3d IF amplifier	7-5*b*, 7-5*d*, 7-6*b*	7-4 7-8
37.5-MHz L.O. amplifier	7-5*b*, 7-5*d*, 7-6*b*	7-4, 7-5 7-8
Variable frequency oscillator	7-5*b*, 7-5*d*, 7-6*b*	7-4, 7-6 7-8
Variable frequency oscillator A3A2:		
Alignment and test	8-11	8-15
Circuit functioning	6-5*g*(3)	6-16
Tracking calibration chart	8-11*c*	8-15
Troubleshooting	7-5*b*, 7-5*d*, 7-6*b*	7-4—7-7 7-8

By Order of the Secretary of the Army:

W. C. WESTMORELAND,
General, United States Army,
Chief of Staff.

Official:
KENNETH G. WICKHAM,
Major General, United States Army,
The Adjutant General.

Distribution: To be distributed in accordance with DA Form 12-51 (qty rqr block no. 961) Operator Maintenance requirements for the R-1421/URR Radio Set.

☆ U.S. GOVERNMENT PRINTING OFFICE: 1969—390924/116

GROUP I Capacitors, F

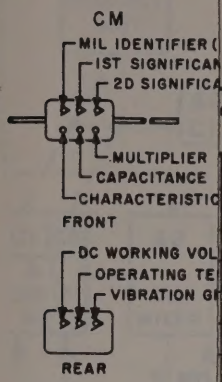

C WORKING VOLTAGE	OPERATING TEMP. RANGE	VIBRATION GRADE
CM	CM	CM
	−55° to +70°C	10–55 cps
	−55° to +85°C	
300		
	−55° to +125°C	10–2,000 cps
500		
	−55° to +150°C	

MICA-DIELECTRI

GROUP II Capacitors, F

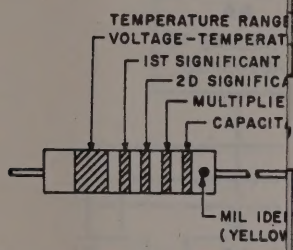

p III, Temperature Compensating, Style CC

2nd SIG FIG	MULTIPLIER[1]	CAPACITANCE TOLERANCE		MIL ID
		Capacitances over 10uuf	Capacitances 10uuf or less	
0	1		± 2.0uuf	CC
1	10	± 1%		
2	100	± 2%	± 0.25uuf	
3	1,000			
4				
5		± 5%	± 0.5uuf	
6				
7				
8	0.01			
9	0.1	± 10%		
			± 1.0uuf	

AXIAL LEAD

GROUP III Capacitors, F

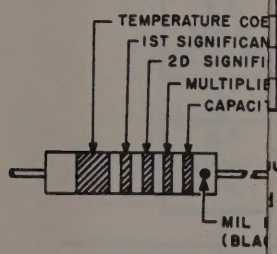

uf.

MIL–C–10950 respectively.

AXIAL LEAD

STD–C2

MIL-STD capacitors.

COLOR CODE MARKING FOR MILITARY STANDARD CAPACITORS

GROUP I Capacitors, Fixed, Various-Dielectrics, Styles CM, CN, CY, and CB

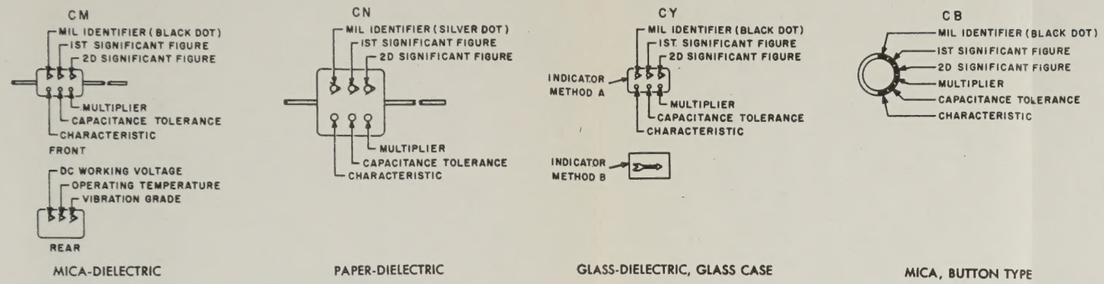

GROUP II Capacitors, Fixed Ceramic-Dielectric (General Purpose) Style CK

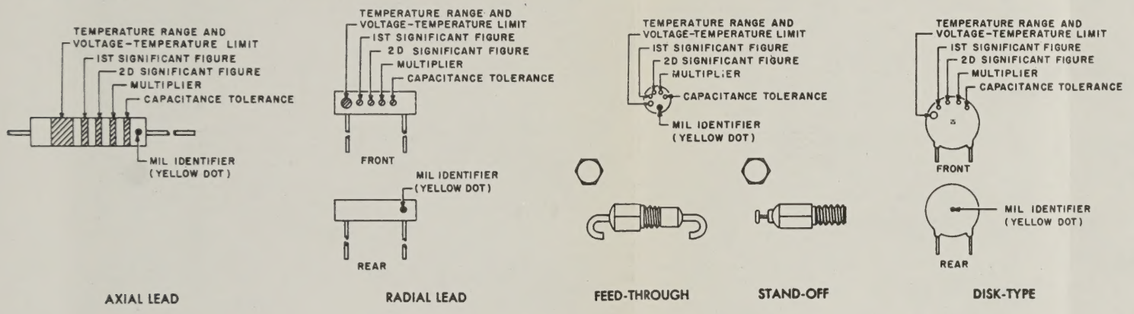

GROUP III Capacitors, Fixed, Ceramic-Dieletric (Temperature Compensating) Style CC

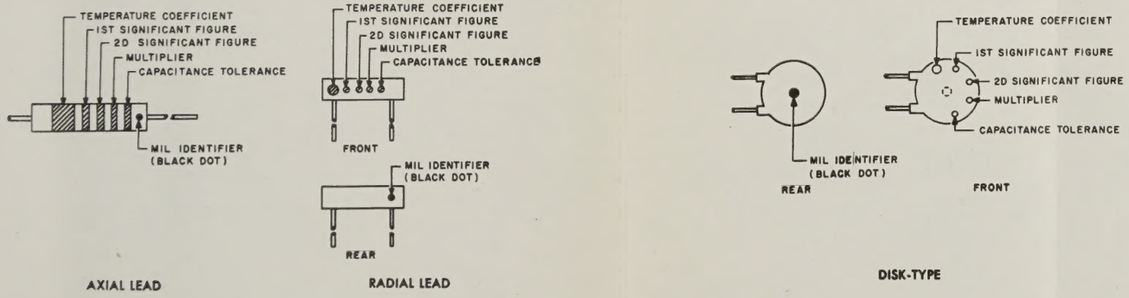

COLOR CODE TABLES

TABLE I – For use with Group I, Styles CM, CN, CY and CB

COLOR	MIL ID	1st SIG FIG	2nd SIG FIG	MULTIPLIER[1]	CAPACITANCE TOLERANCE				CHARACTERISTIC[2]				DC WORKING VOLTAGE	OPERATING TEMP. RANGE	VIBRATION GRADE
					CM	CN	CY	CB	CM	CN	CY	CB	CM	CM	CM
BLACK	CM, CY CB	0	0	1			± 20%	± 20%		A				−55° to +70°C	10–55 cps
BROWN		1	1	10					B	E		B			
RED		2	2	100	± 2%		± 2%	± 2%	C		C			−55° to +85°C	
ORANGE		3	3	1,000		± 30%			D			D	300		
YELLOW		4	4	10,000					E					−55° to +125°C	10–2,000 cps
GREEN		5	5		± 5%				F				500		
BLUE		6	6											−55° to +150°C	
PURPLE (VIOLET)		7	7												
GREY		8	8												
WHITE		9	9												
GOLD				0.1			± 5%	± 5%							
SILVER	CN				± 10%	± 10%	± 10%	± 10%							

TABLE II – For use with Group II, General Purpose, Style CK

COLOR	TEMP. RANGE AND VOLTAGE – TEMP. LIMITS[3]	1st SIG FIG	2nd SIG FIG	MULTIPLIER[1]	CAPACITANCE TOLERANCE	MIL ID
BLACK		0	0	1	± 20%	
BROWN	AW	1	1	10	± 10%	
RED	AX	2	2	100		
ORANGE	BX	3	3	1,000		
YELLOW	AV	4	4	10,000		CK
GREEN	CZ	5	5			
BLUE	BV	6	6			
PURPLE (VIOLET)		7	7			
GREY		8	8			
WHITE		9	9			
GOLD						
SILVER						

TABLE III – For use with Group III, Temperature Compensating, Style CC

COLOR	TEMPERATURE COEFFICIENT[4]	1st SIG FIG	2nd SIG FIG	MULTIPLIER[1]	CAPACITANCE TOLERANCE		MIL ID
					Capacitances over 10uuf	Capacitances 10uuf or less	
BLACK	0	0	0	1		± 2.0uuf	CC
BROWN	−30	1	1	10	± 1%		
RED	−80	2	2	100	± 2%	± 0.25uuf	
ORANGE	−150	3	3	1,000			
YELLOW	−220	4	4				
GREEN	−330	5	5		± 5%	± 0.5uuf	
BLUE	−470	6	6				
PURPLE (VIOLET)	−750	7	7				
GREY		8	8	0.01			
WHITE		9	9	0.1	± 10%		
GOLD	+100					± 1.0uuf	
SILVER							

1. The multiplier is the number by which the two significant (SIG) figures are multiplied to obtain the capacitance in uuf.
2. Letters indicate the Characteristics designated in applicable specifications: MIL–C–5, MIL–C–91, MIL–C–11272, and MIL–C–10950 respectively.
3. Letters indicate the temperature range and voltage-temperature limits designated in MIL–C–11015.
4. Temperature coefficient in parts per million per degree centigrade.

STD–C2

Figure 6-21. Color code markings for MIL-STD capacitors.

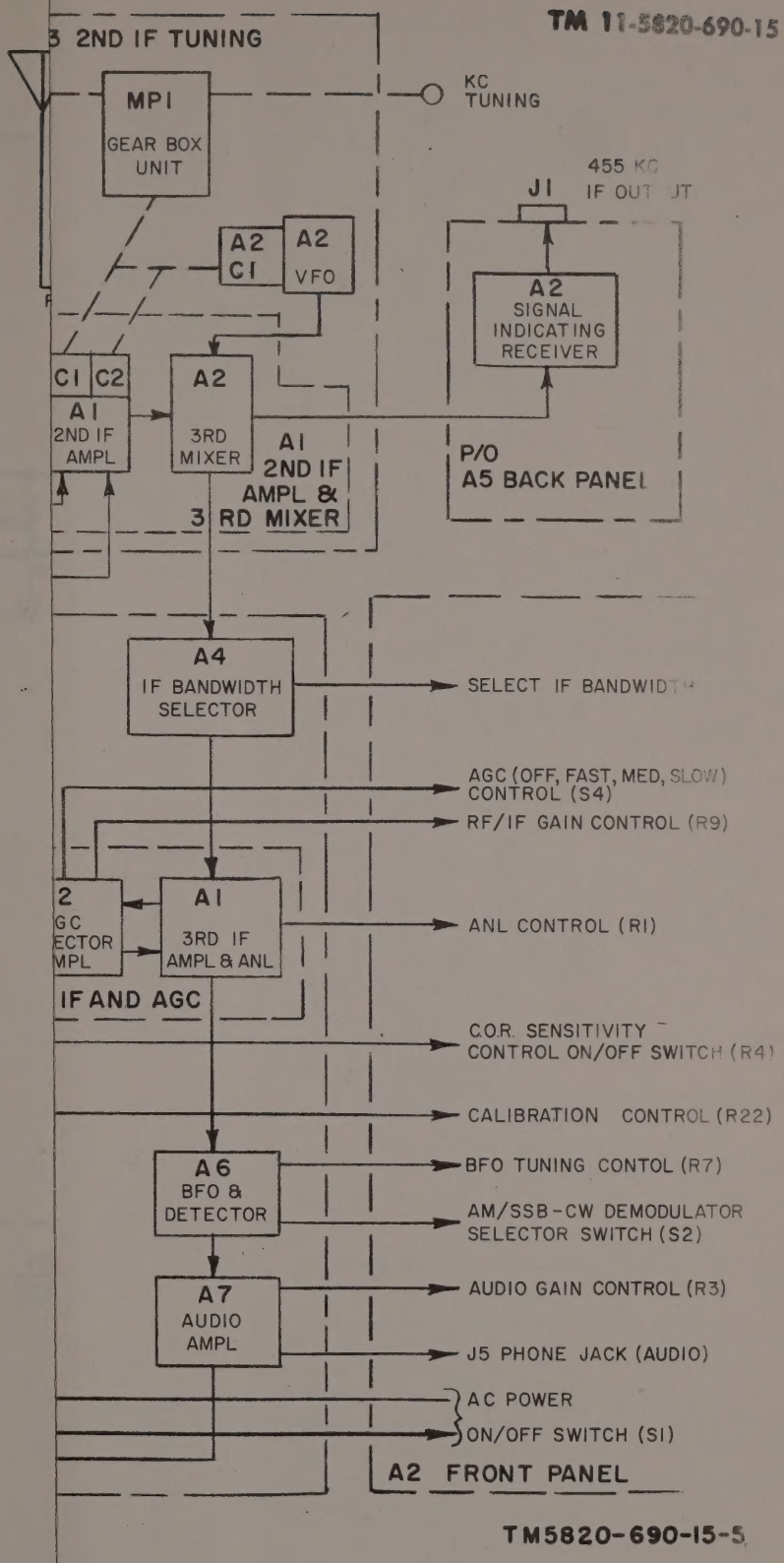

lies, Receiver Radio R-1421A/URR, block diagram.

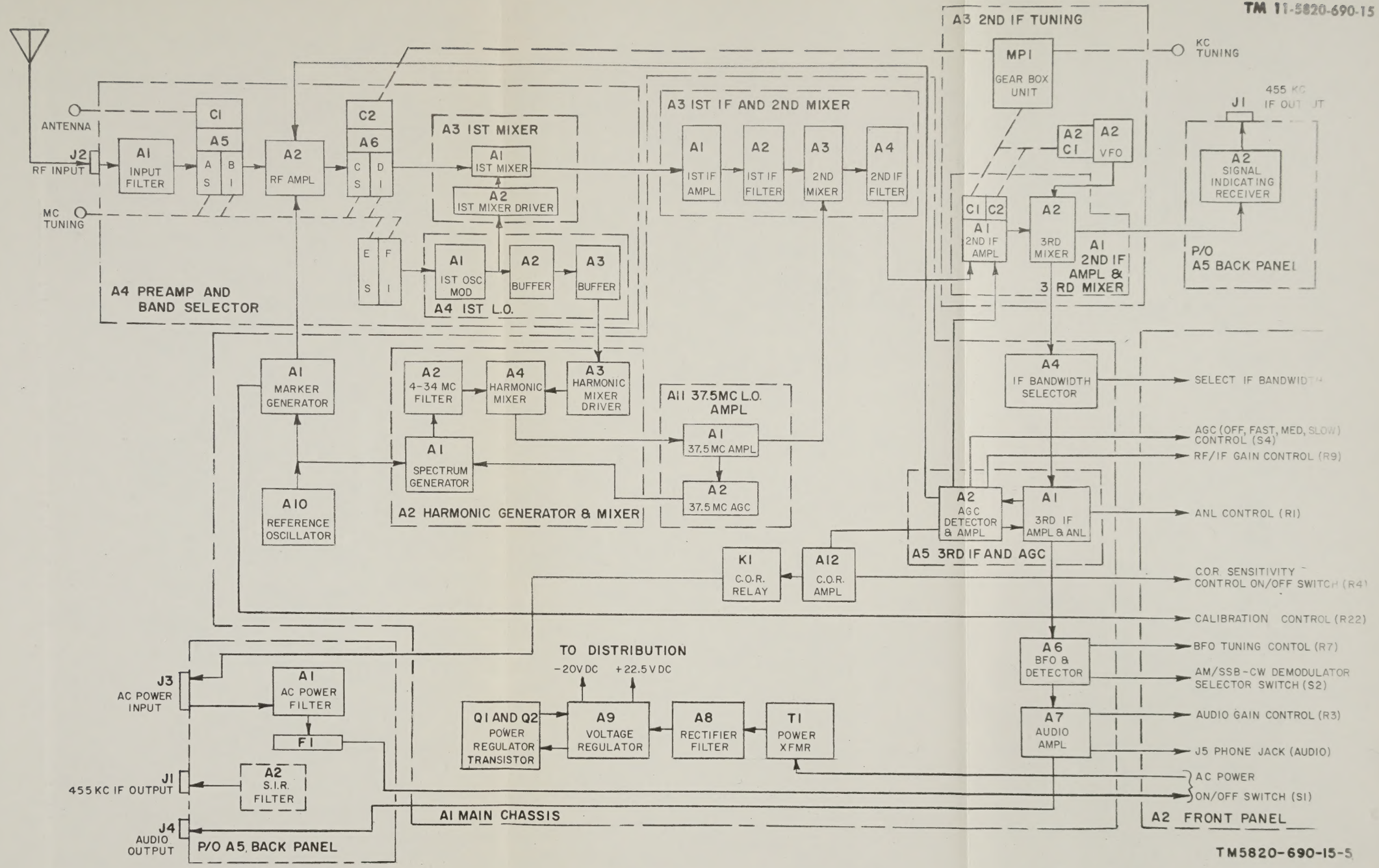

Figure 6-22. Subassemblies, Receiver Radio R-1421A/URR, block diagram.

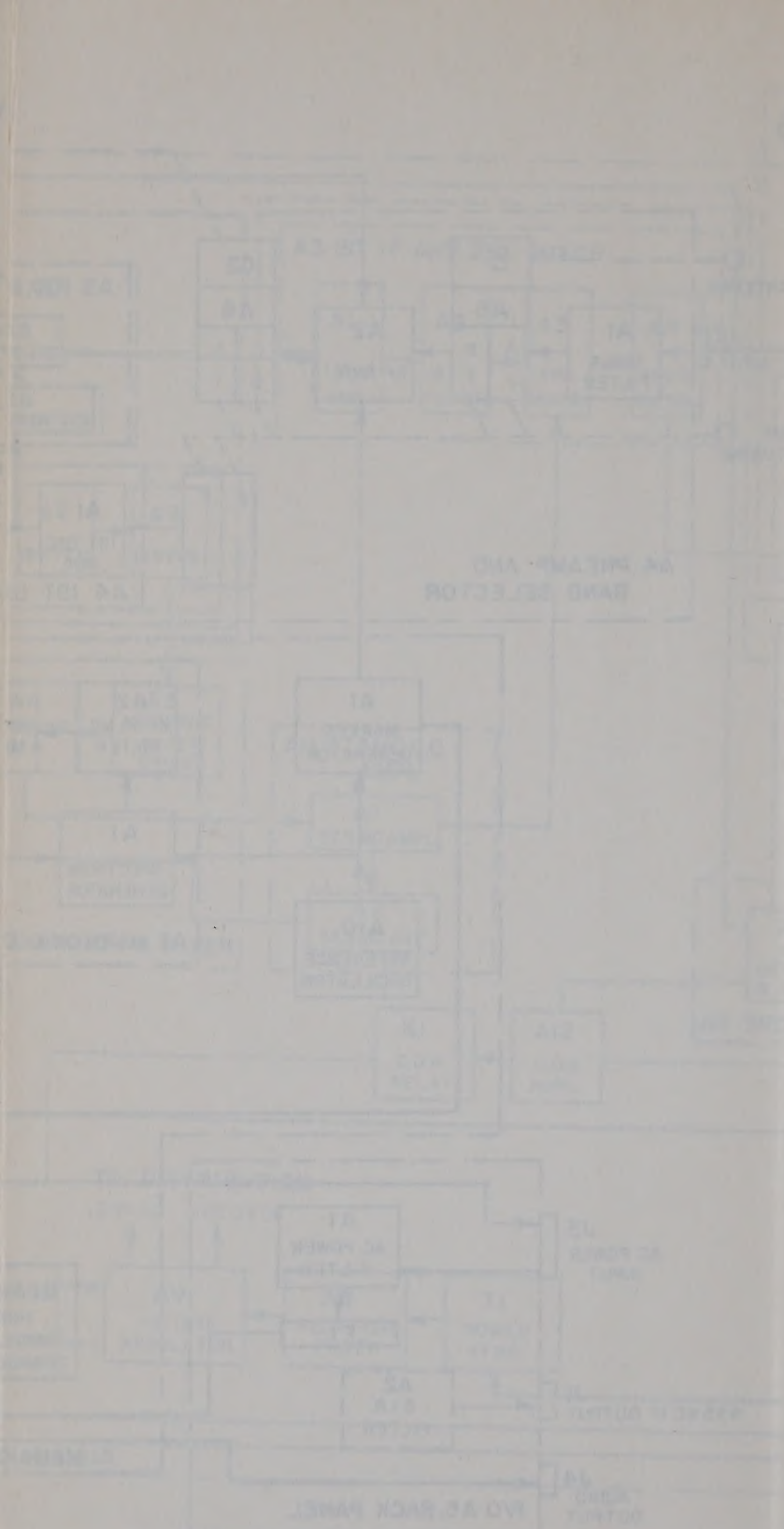

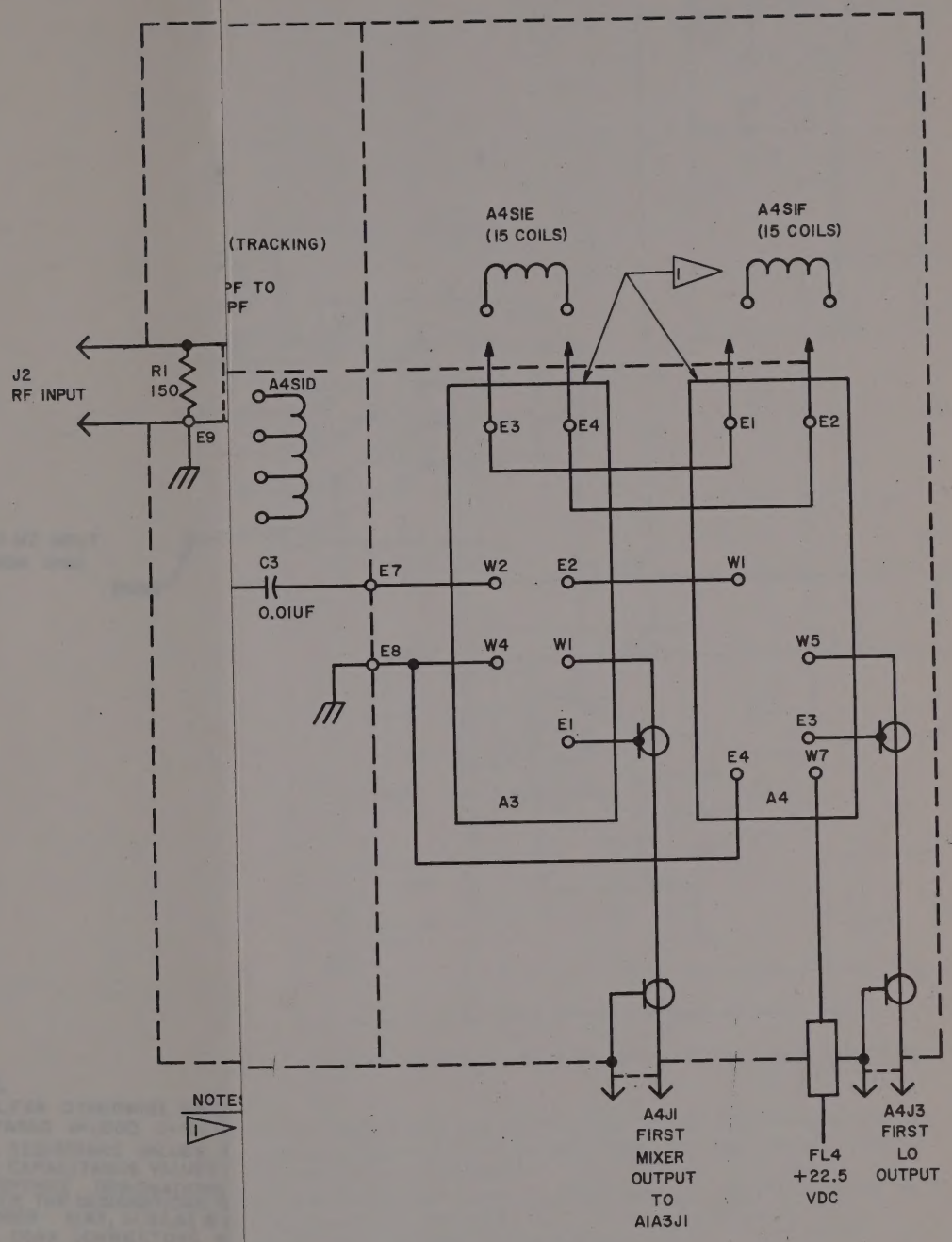

TM 5820-690-15-6

and band selector A4, schematic diagram.

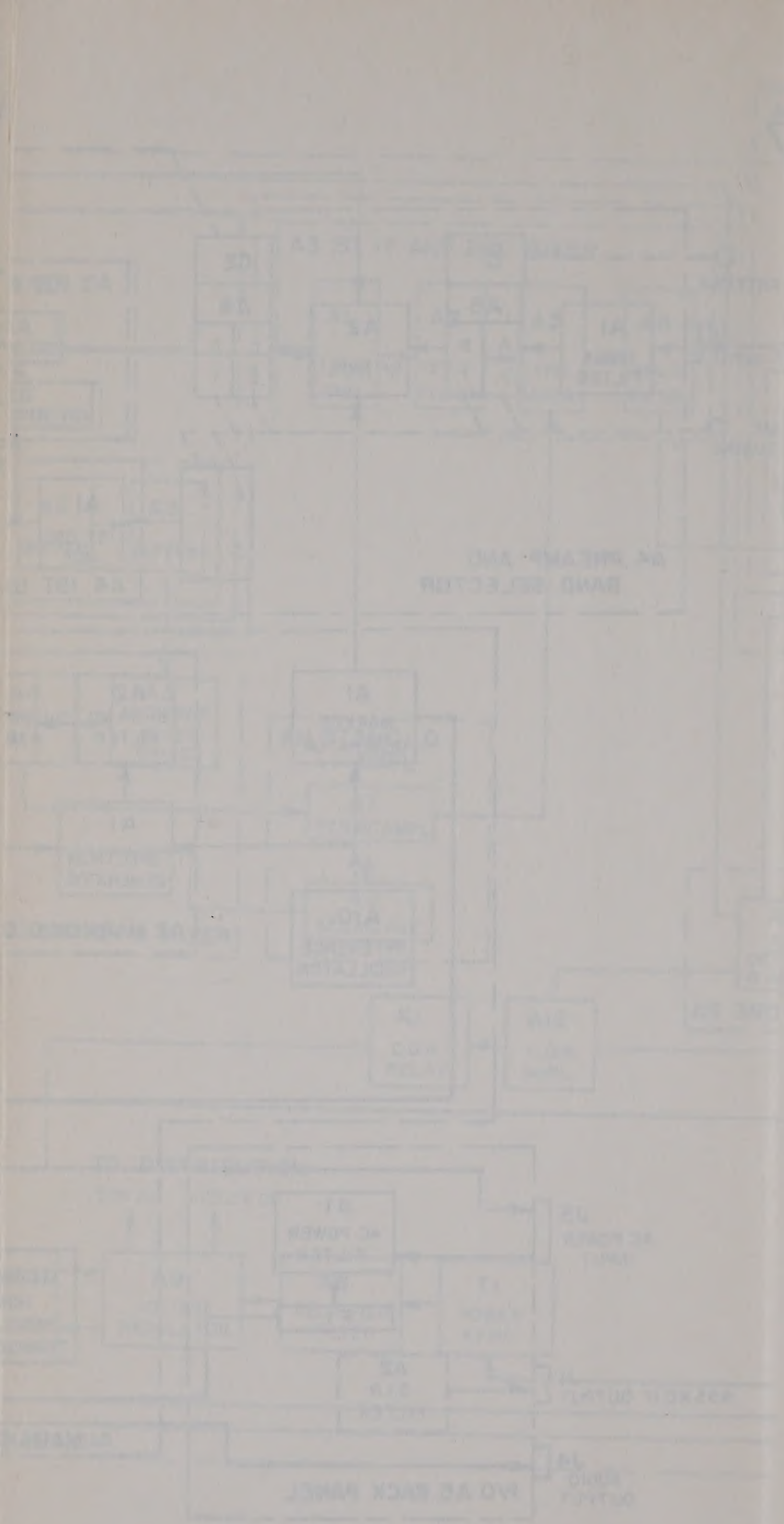

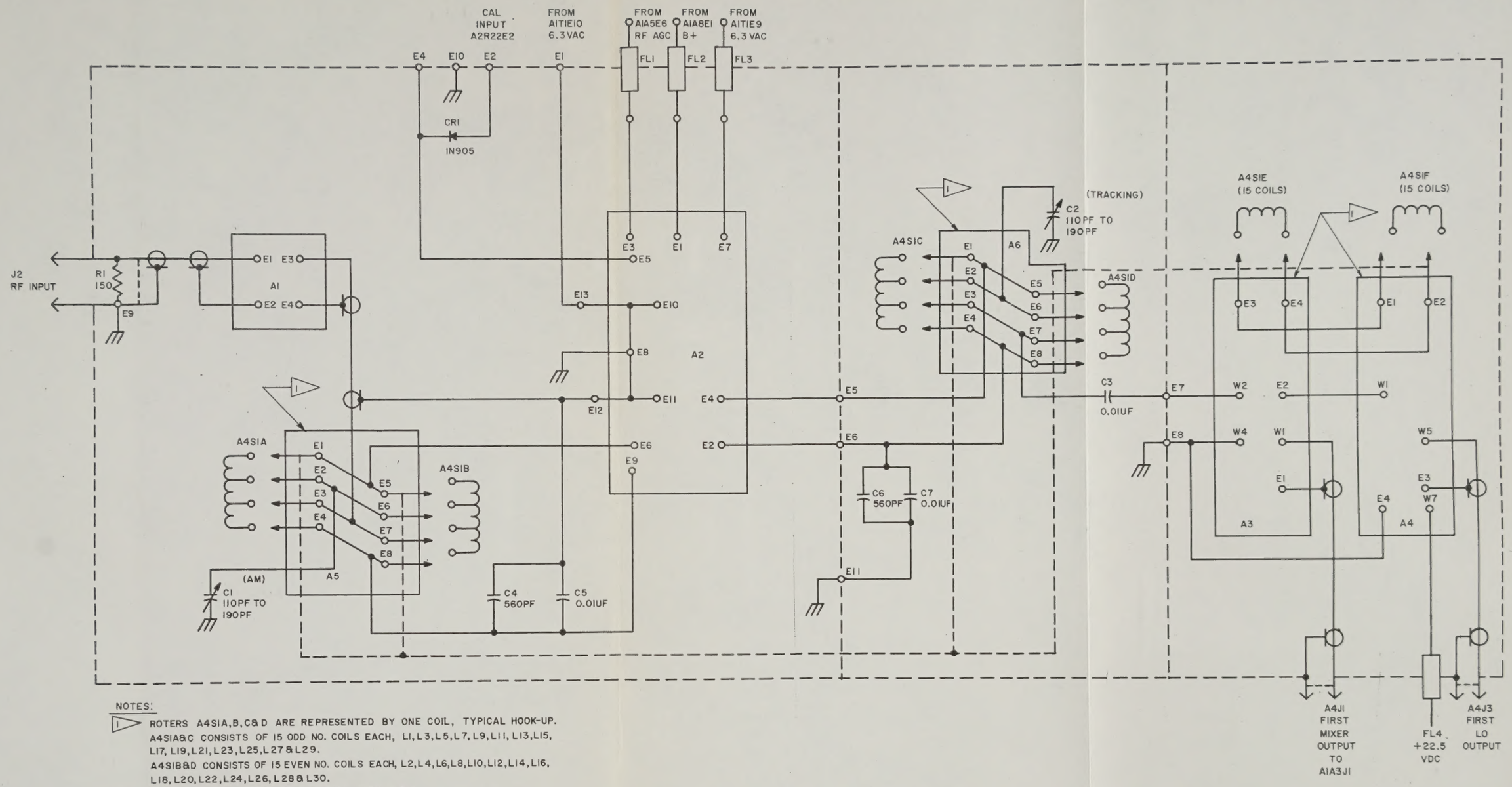

NOTES:

1. ROTERS A4S1A,B,C&D ARE REPRESENTED BY ONE COIL, TYPICAL HOOK-UP.
   A4S1A&C CONSISTS OF 15 ODD NO. COILS EACH, L1, L3, L5, L7, L9, L11, L13, L15, L17, L19, L21, L23, L25, L27 & L29.
   A4S1B&D CONSISTS OF 15 EVEN NO. COILS EACH, L2, L4, L6, L8, L10, L12, L14, L16, L18, L20, L22, L24, L26, L28 & L30.
   ROTERS A & C ALTERNATELY SWITCH WITH B & D.
   A4S1E HAS 15 ODD NO. COILS L31, L33, L35, L37, L39, L41, L43, L45, L47, L49, L51, L53, L55, L57 & L59.
   A4S1F HAS 15 EVEN NO. COILS L30, L32, L34, L36, L38, L40, L42, L44, L46, L48, L50, L52, L54, L56, L58 & L60.

TM 5820-690-15-6

Figure 6-23. Preamplifier and band selector A4, schematic diagram.

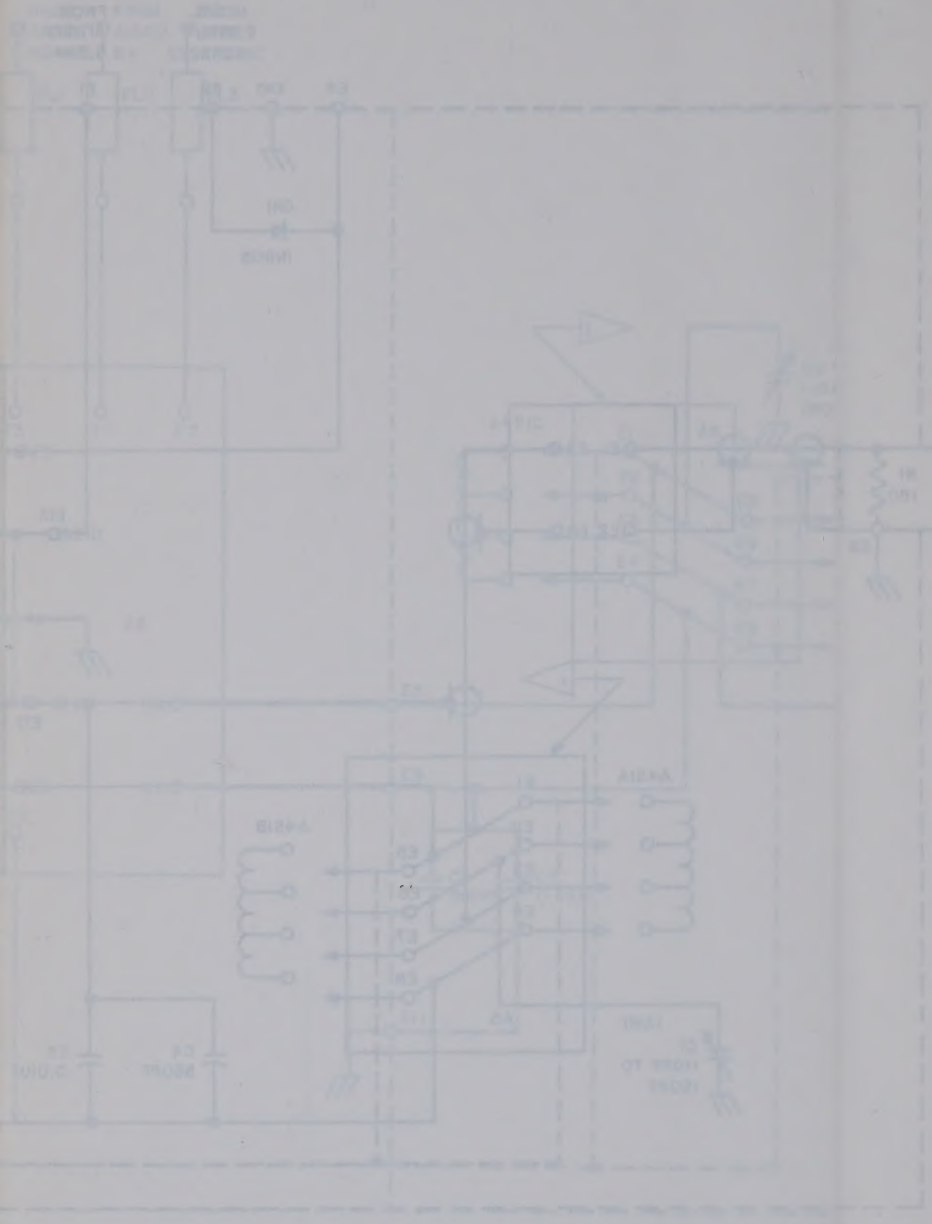

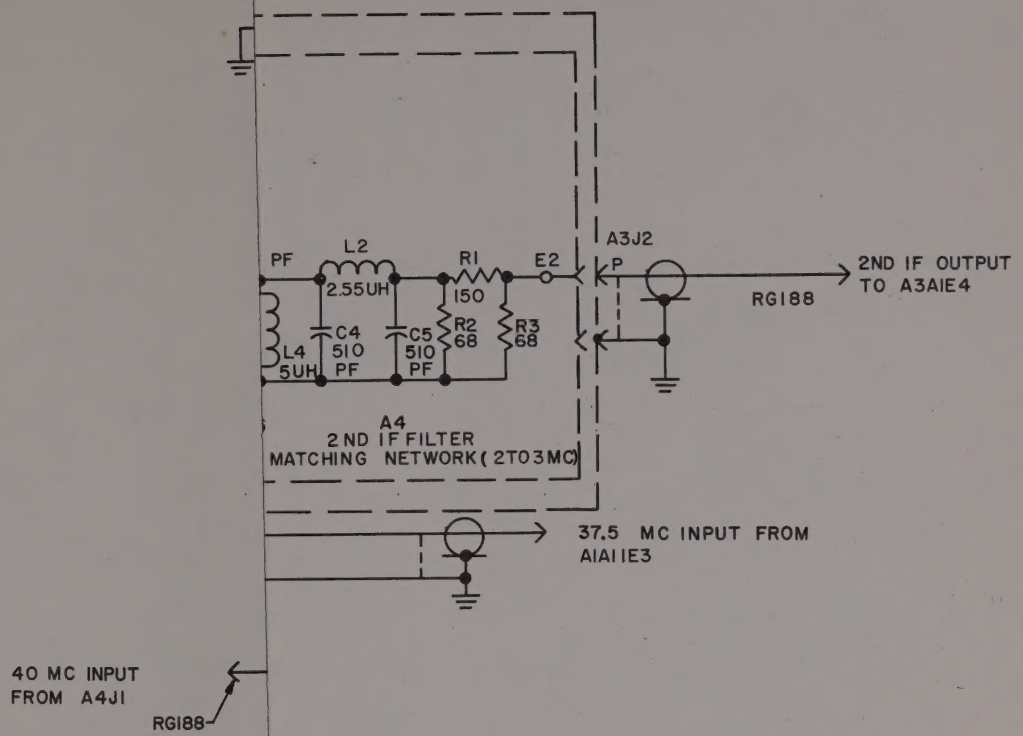

NOTES:

UNLESS OTHERWISE SPEC

1. F = FARAD K=1,000 U=MICR
2. ALL RESISTANCE VALUES A
   ALL CAPACITANCE VALUES
3. REFERENCE DESIGNATIONS
   PREFIX THE DESIGNATIONS W
   NUMBER AIA3, AI, A2, A3 &
4. ALL COAX CONNECTORS A

5 — FEED THRU TERMINA

TM 5820-690-15-13

2d mixer A1A3, schematic diagram.

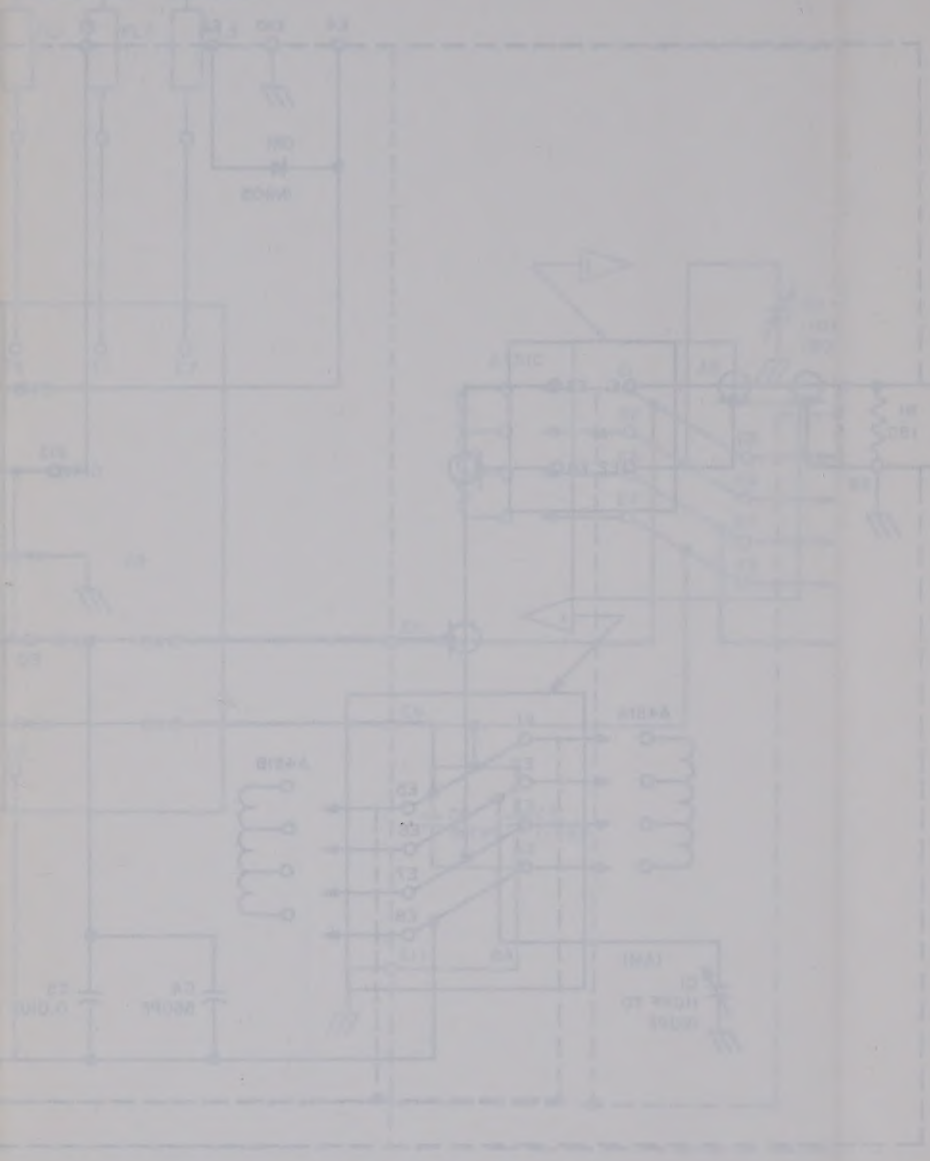

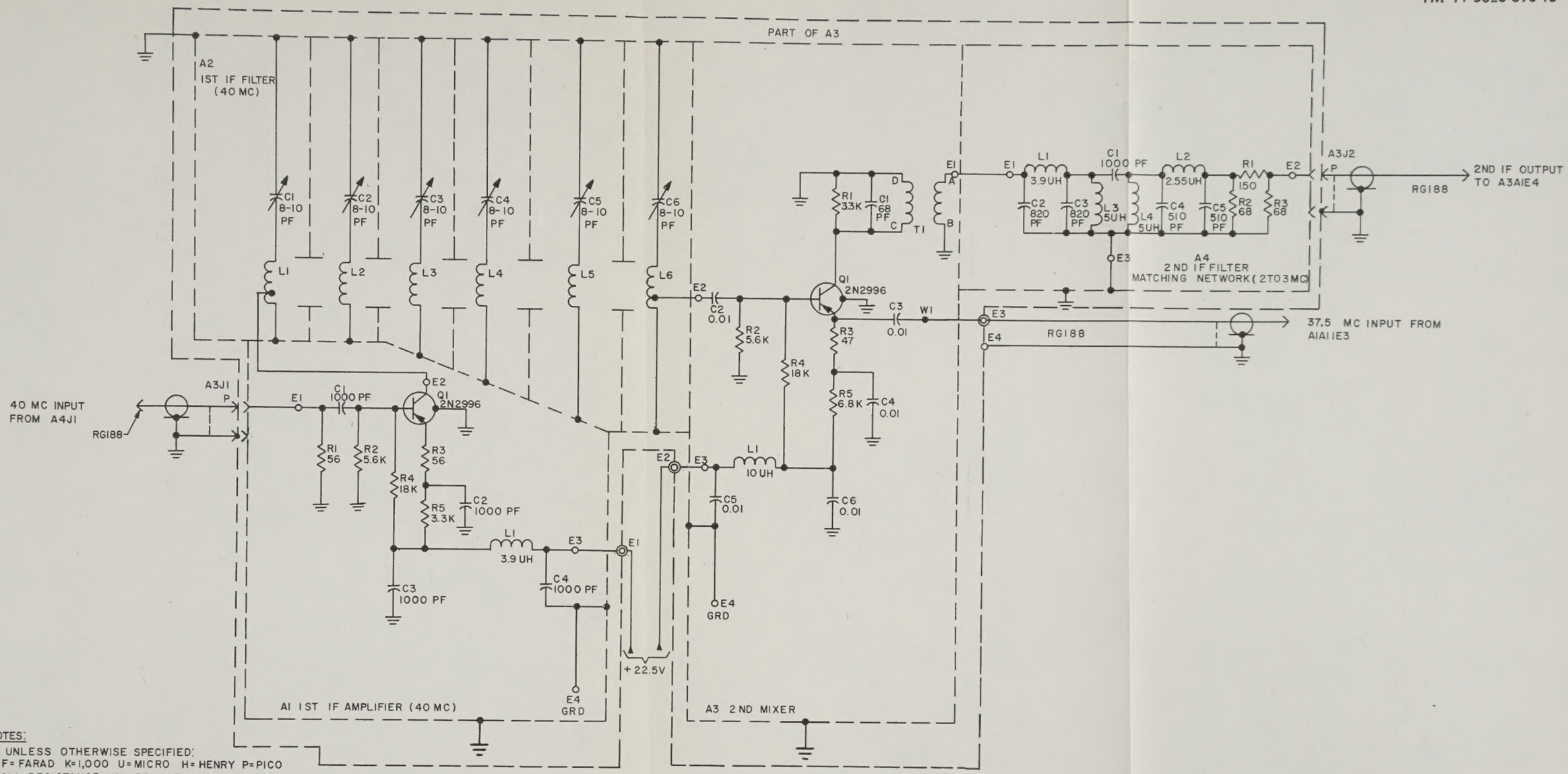

NOTES:

UNLESS OTHERWISE SPECIFIED:

1. F = FARAD K = 1,000 U = MICRO H = HENRY P = PICO
2. ALL RESISTANCE VALUES ARE IN OHMS. ALL CAPACITANCE VALUES ARE IN UF.
3. REFERENCE DESIGNATIONS ARE ABBREVIATED PREFIX THE DESIGNATIONS WITH THE UNIT NUMBER A1A3, A1, A2, A3 & A4.
4. ALL COAX CONNECTORS ARE SUBMIN PT NO.
5. ⊚ FEED THRU TERMINAL.

TM 5820-690-15-13

Figure 6-24. 1st IF and 2d mixer A1A3, schematic diagram.

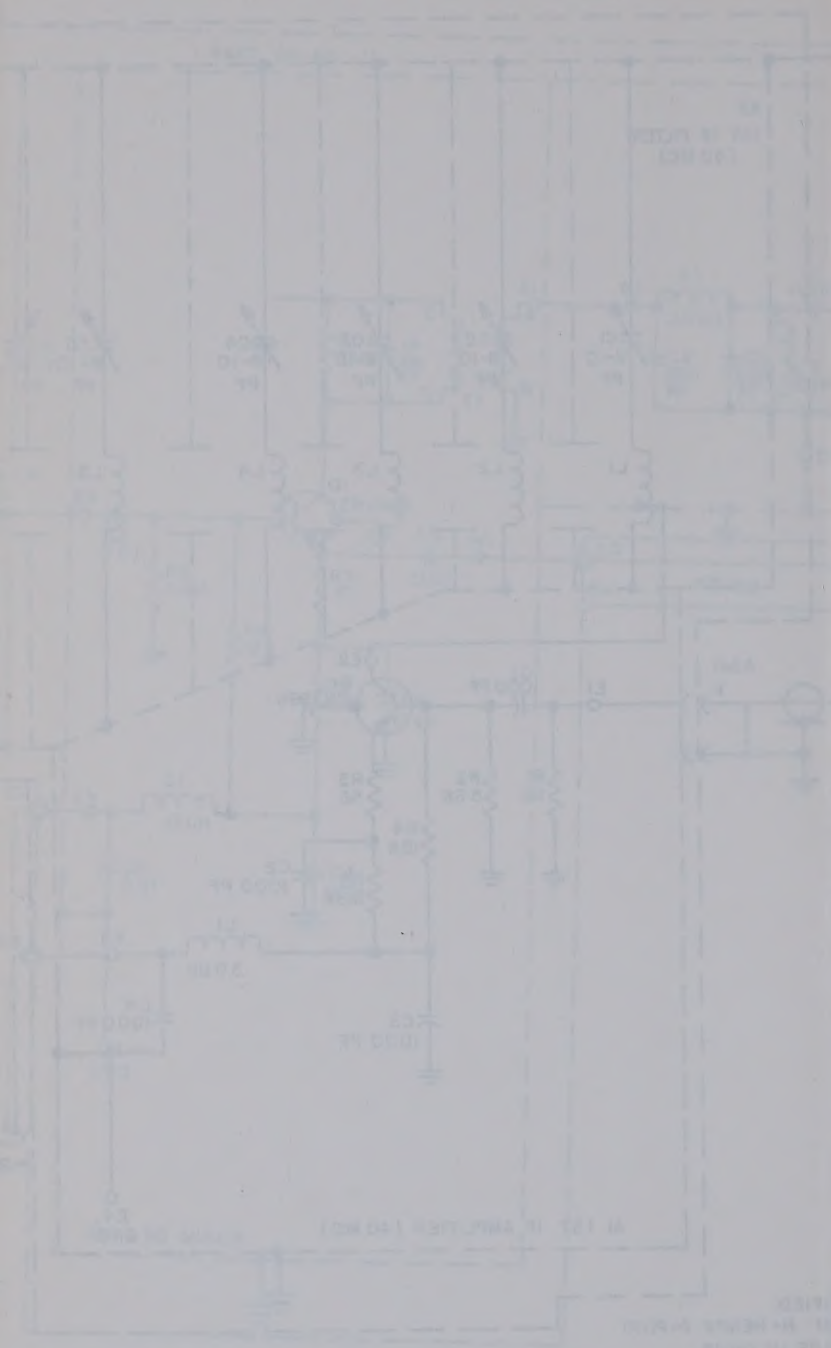

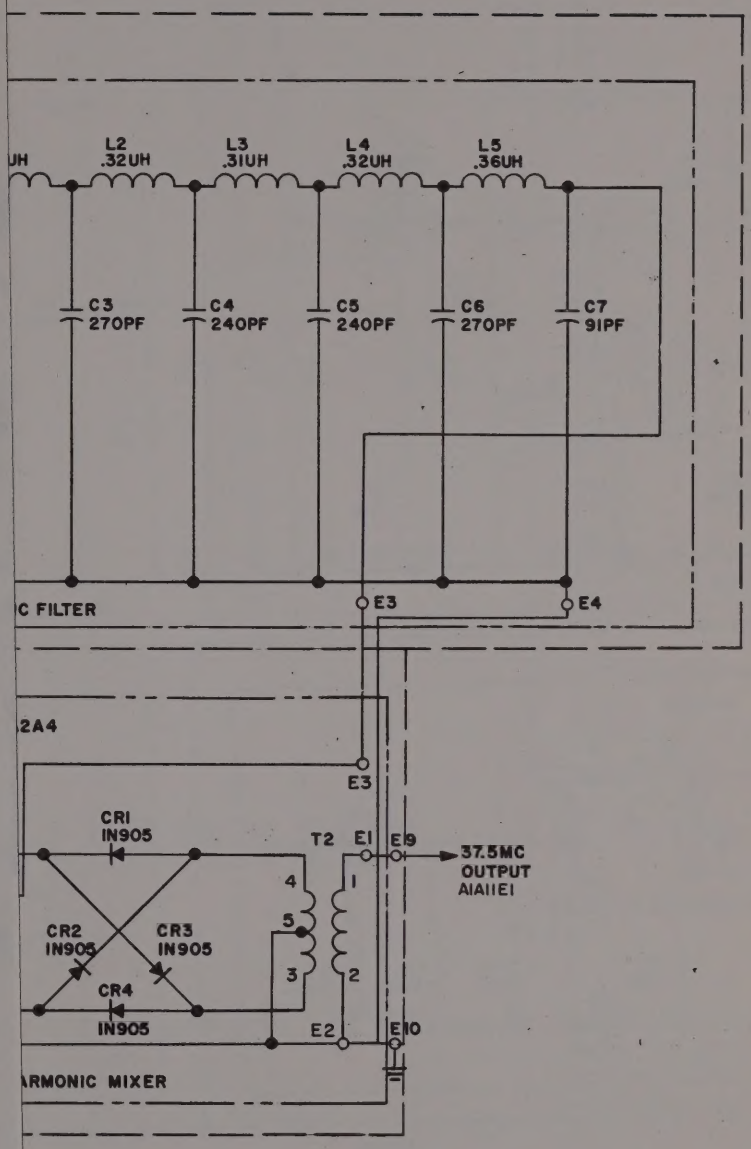

TM5820-690-15-15

ator and mixer A1A2, schematic diagram.

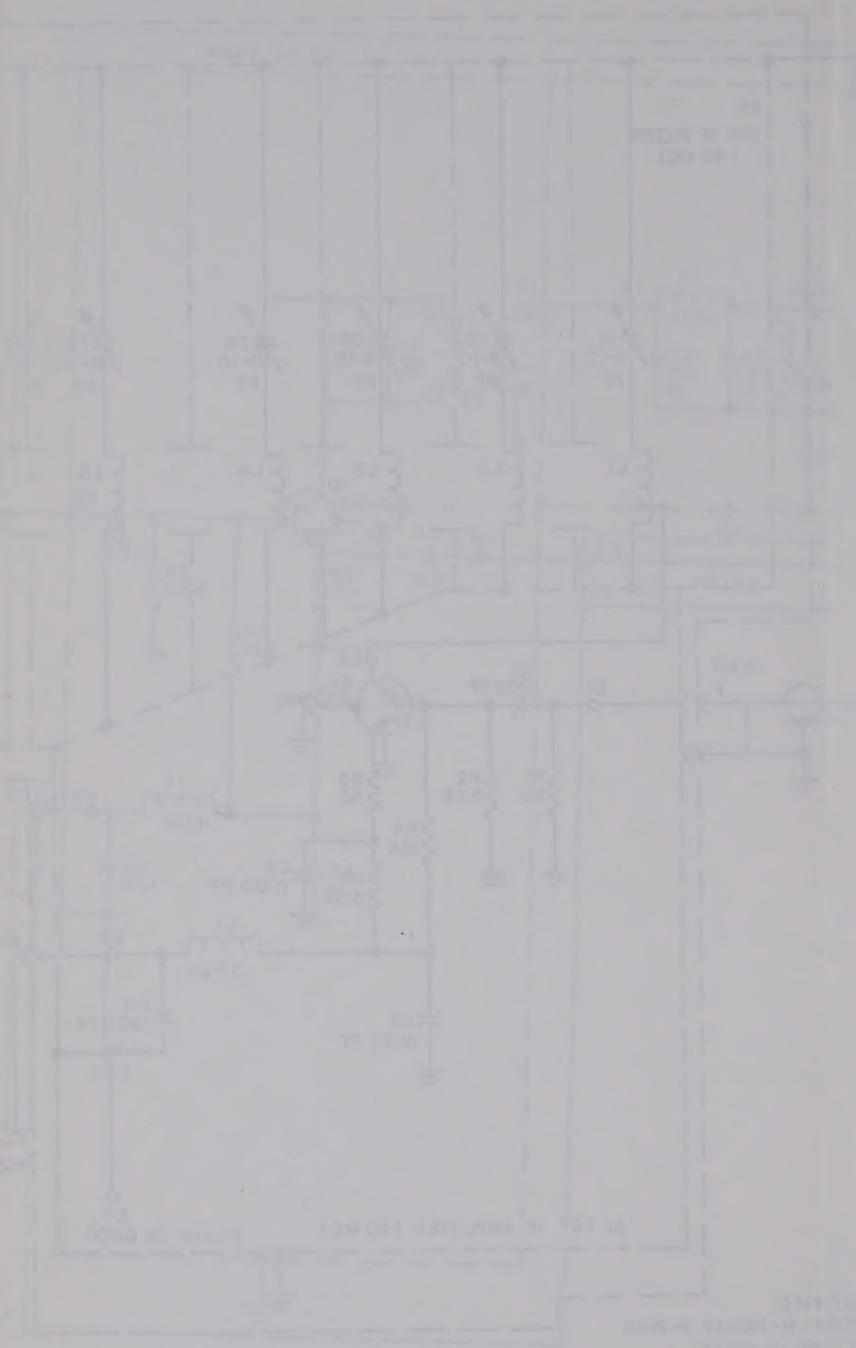

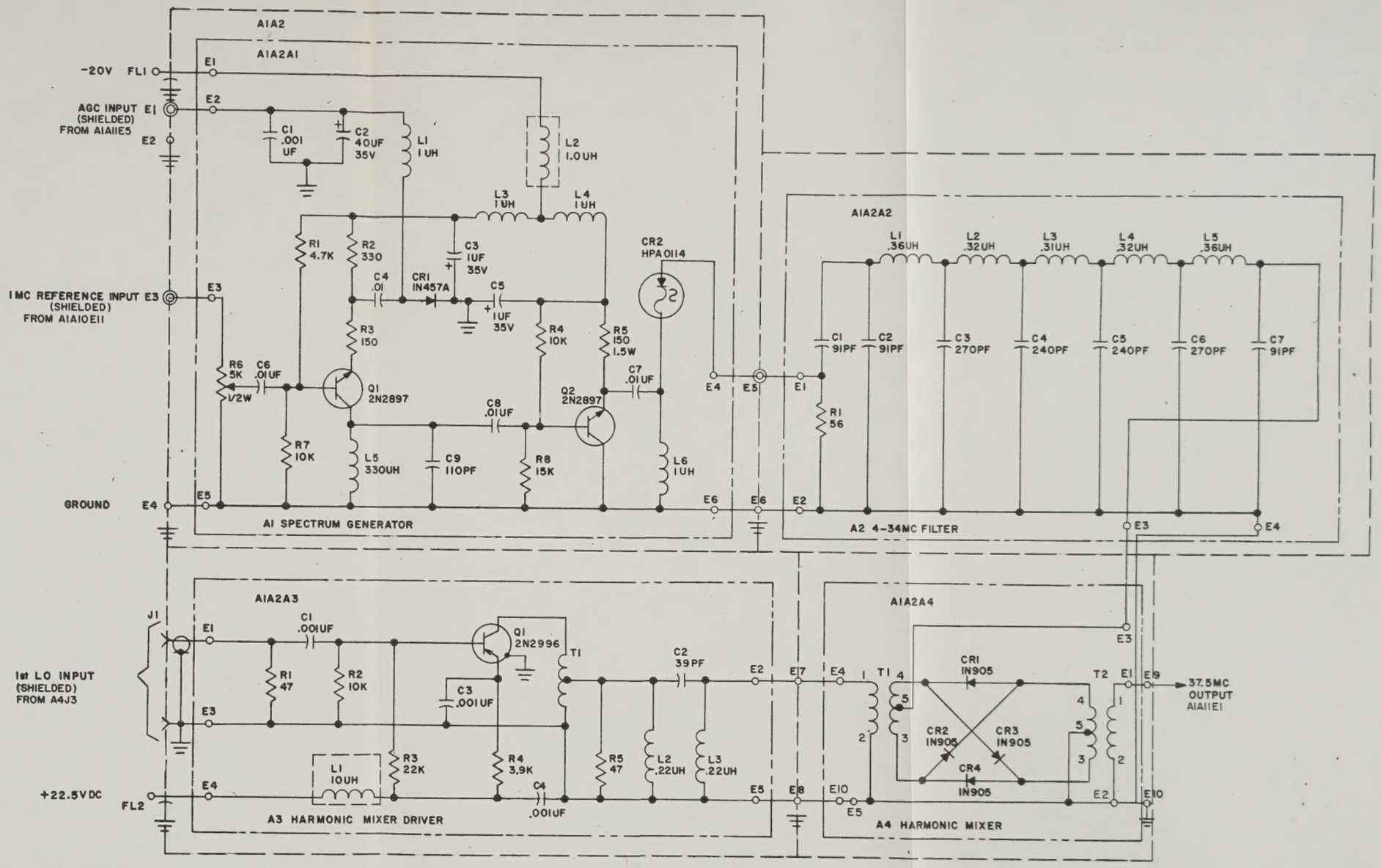

NOTES:
1. F=FARAD K=1,000 U=MICRO H=HENRY P=PICO W=WATT
2. UNLESS OTHERWISE SPECIFIED:
   ALL RESISTANCE VALUES ARE IN OHMS 1/4W ±5%
3. REFERENCE DESIGNATIONS ARE ABBREVIATED PREFIX THE DESIGNATION WITH THE UNIT NUMBER A1A2, A1A2A1, A2, A3, & A4 AS APPLICABLE.
4. ⊚ INDICATES FEED THRU TERMINAL.

TM5820-690-15-15

Figure 6-25. Harmonic generator and mixer A1A2, schematic diagram.

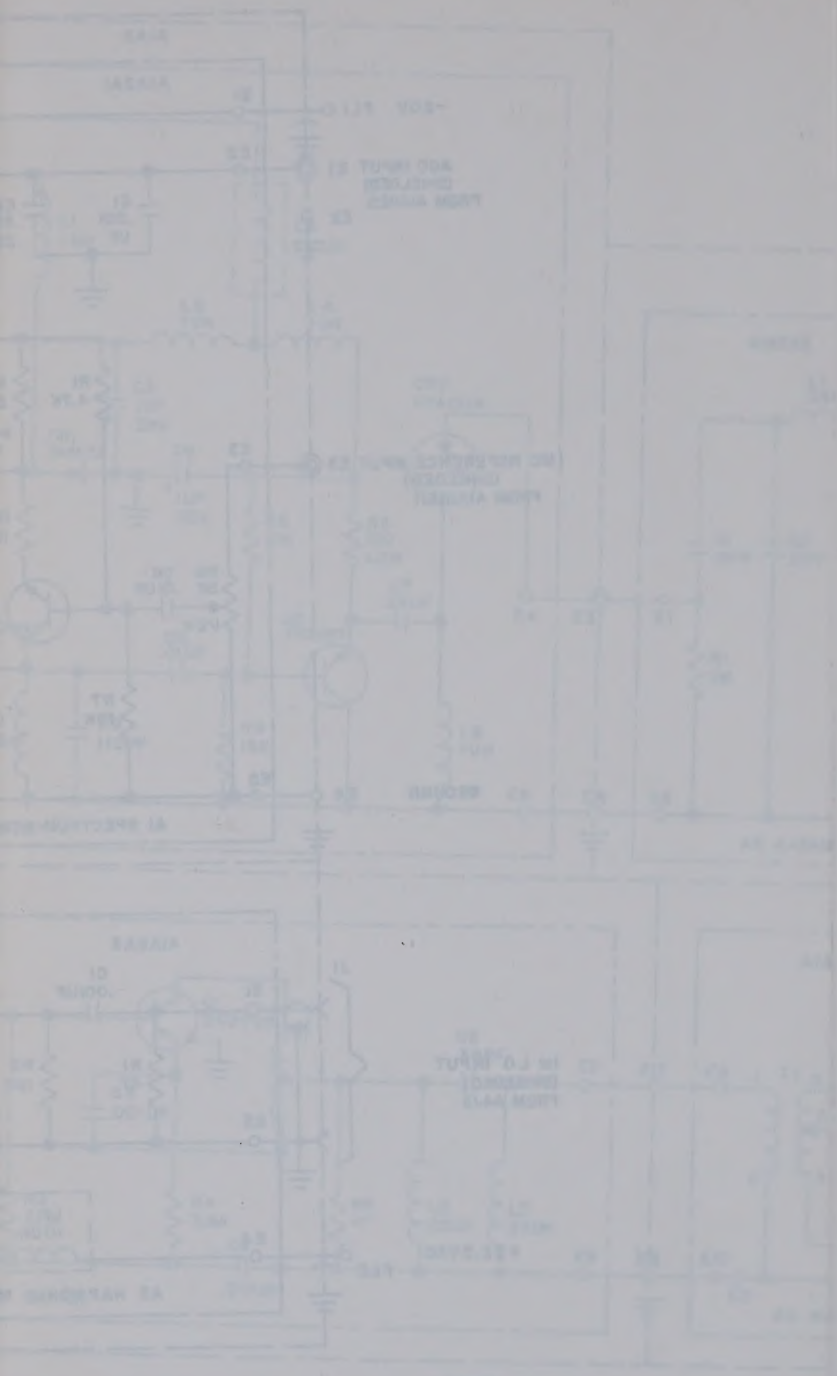

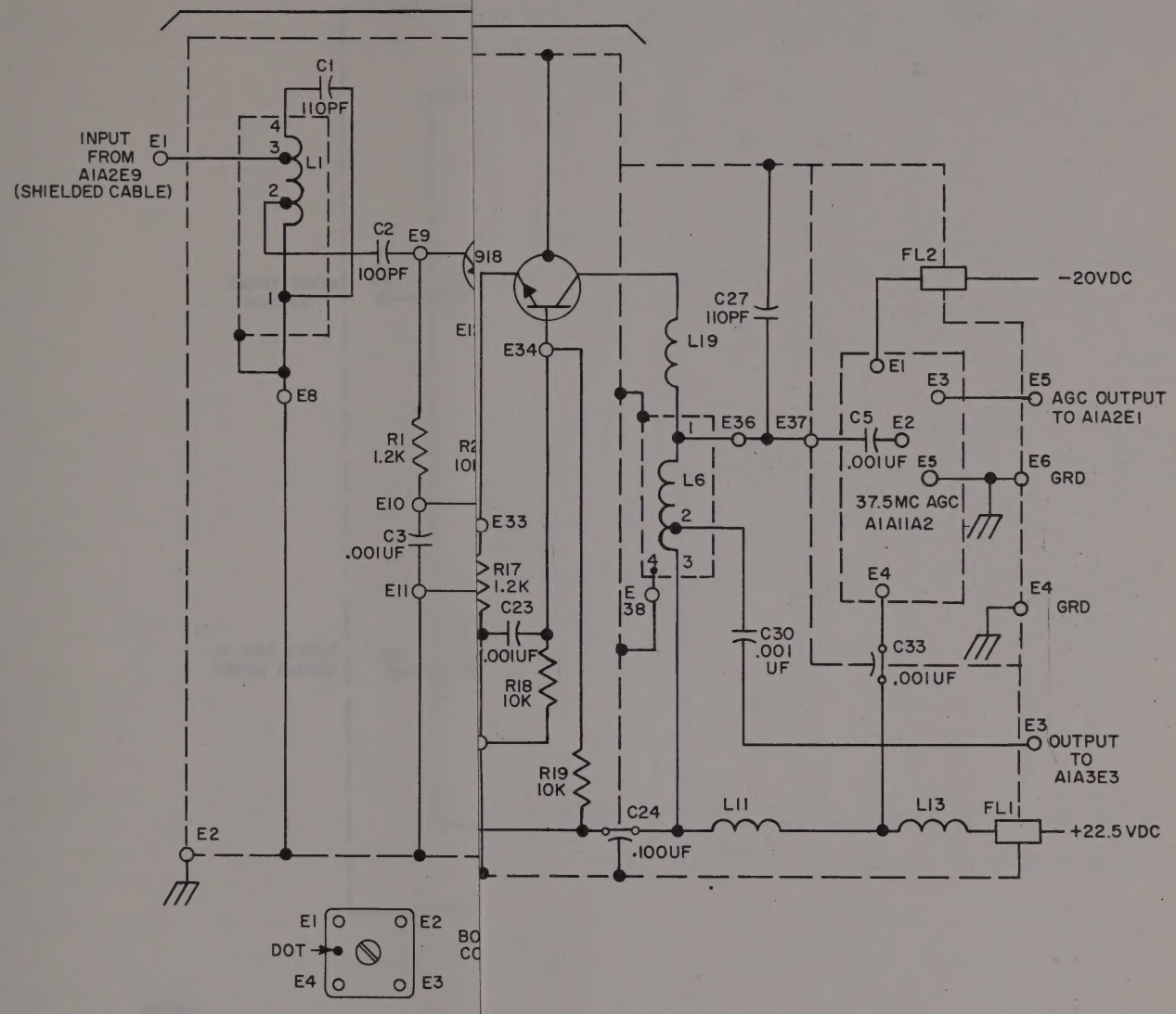

Oscillator amplifier A1A11A1, schematic diagram.

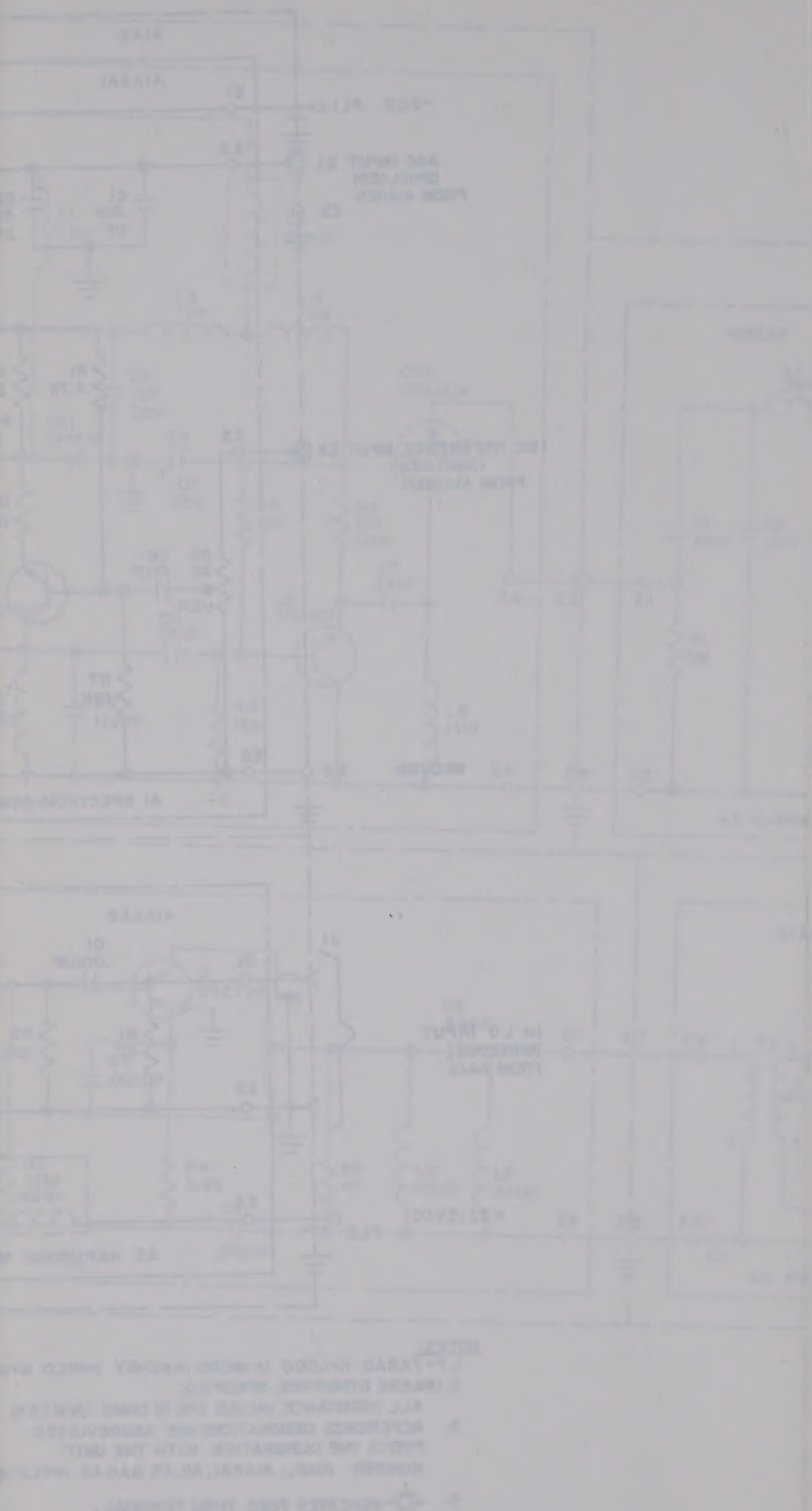

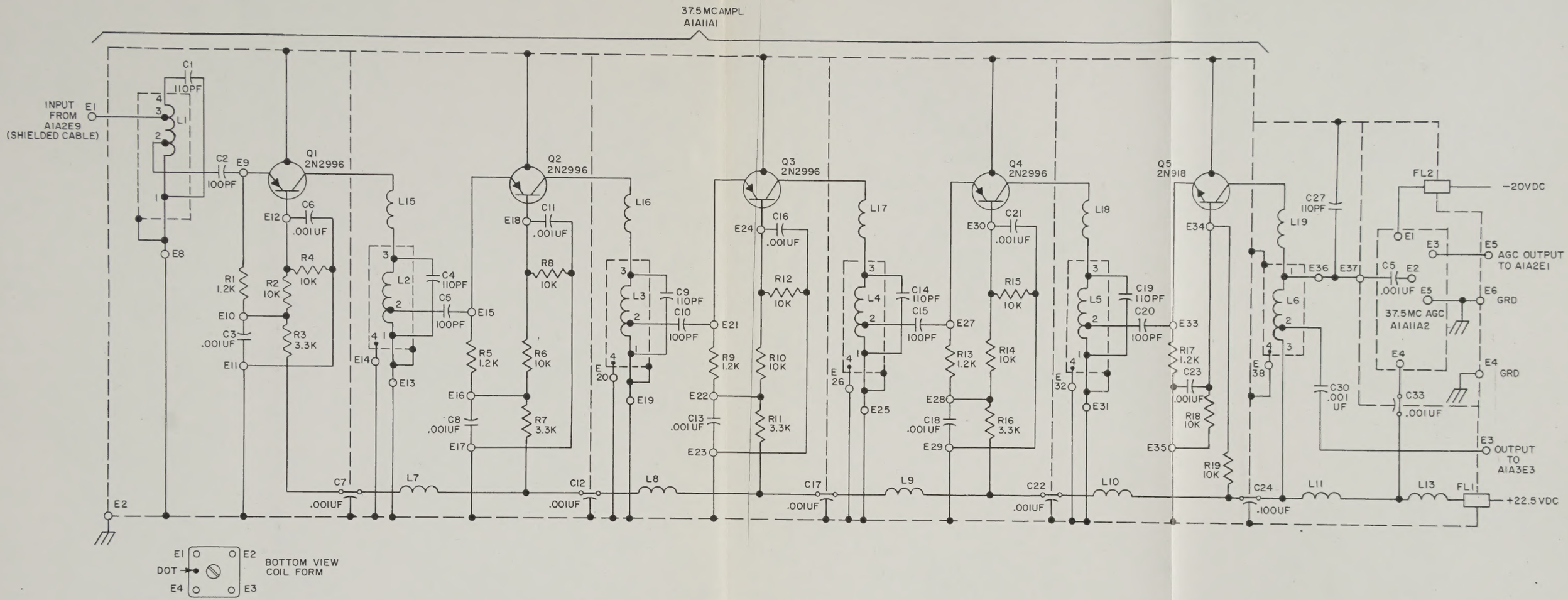

TM5820-690-15-16

Figure 6-26. 37.5-MHz local oscillator amplifier A1A11A1, schematic diagram.

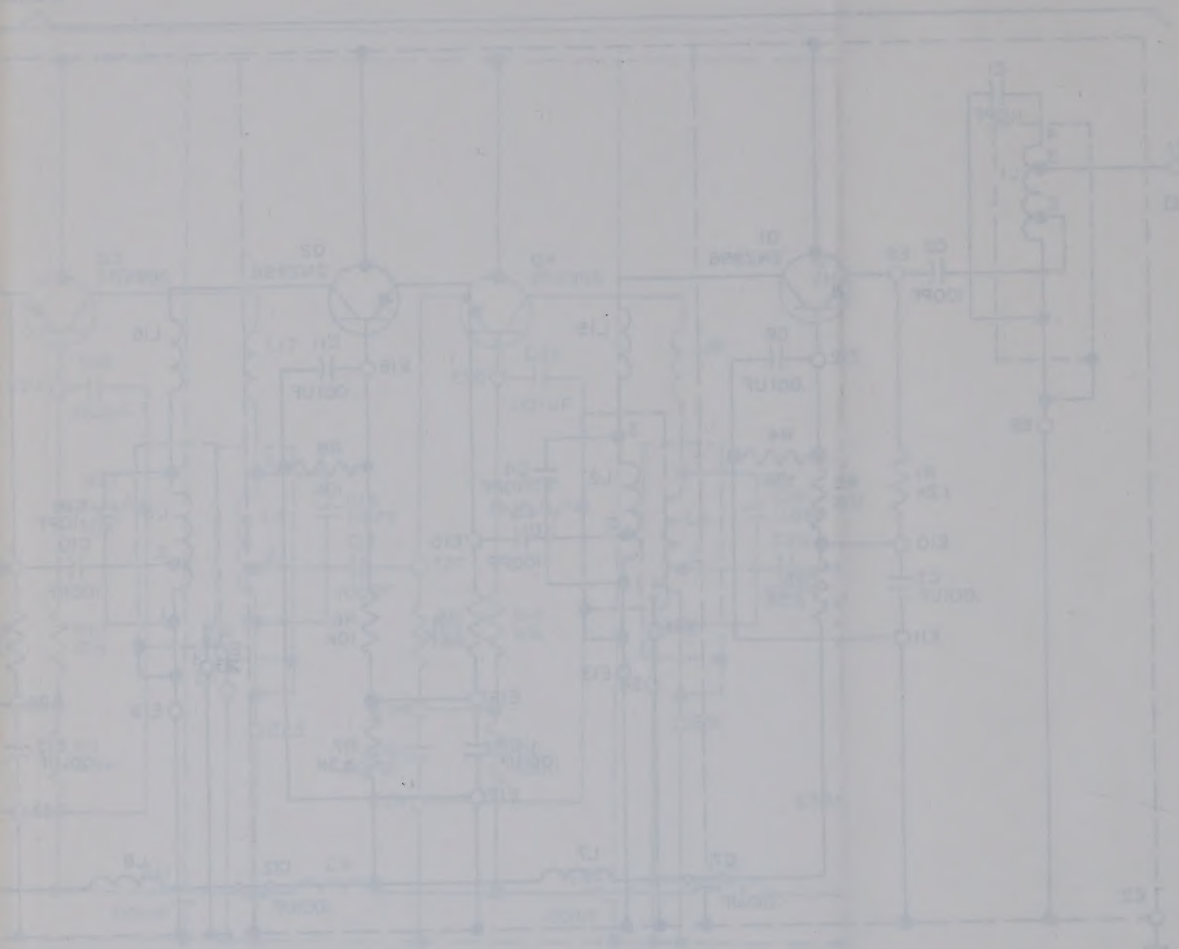

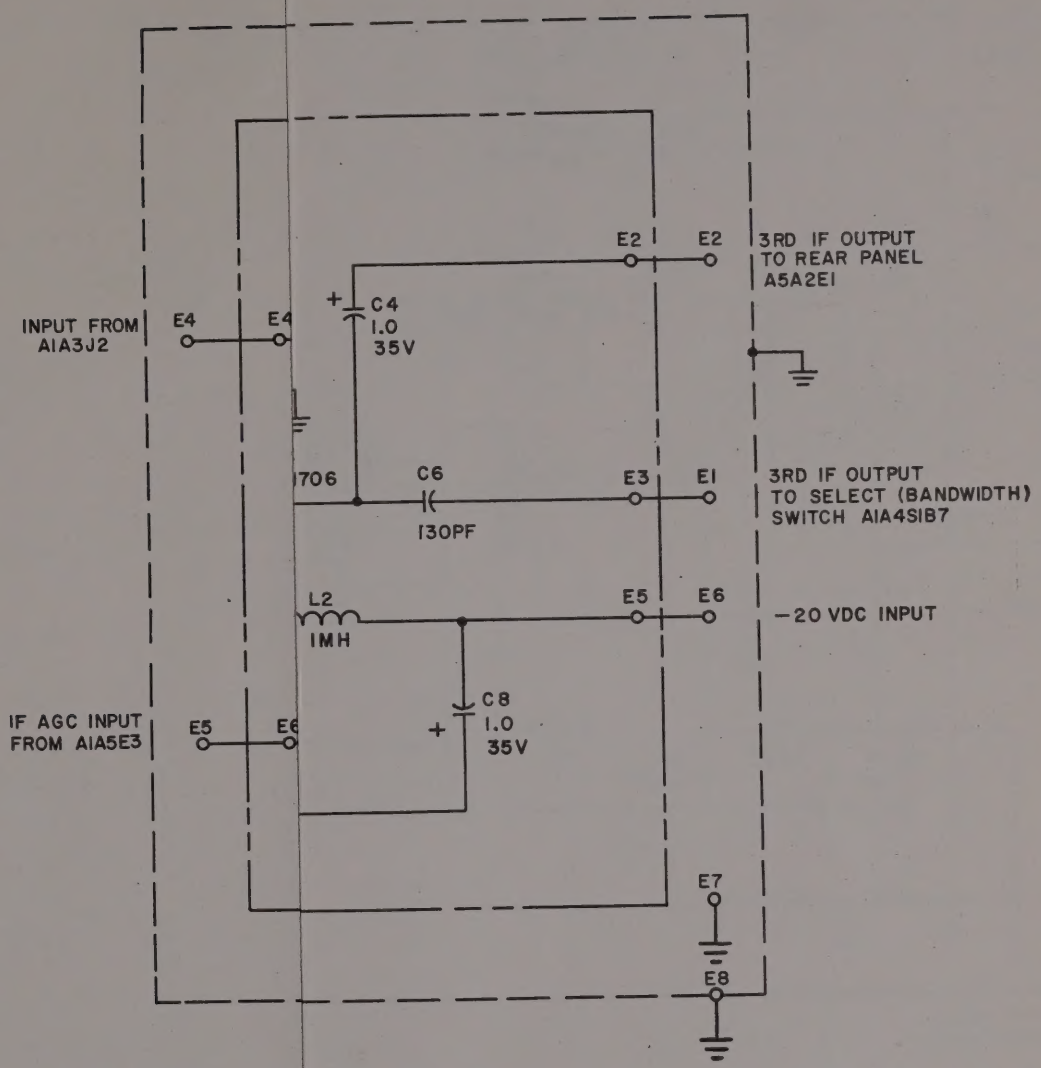

NOTES:

1. K=1,000 MEGO=1,000,000 F=FARAD H=
   M=MILLI U=MICRO W=WATT P=PICO
2. UNLESS OTHERWISE SPECIFIED:
   ALL RESISTANCE VALUES ARE IN OHM
   ALL RESISTORS ARE 1/4 W, ±5%.
   ALL CAPACITANCE VALUES ARE IN UF
   ALL INDUCTANCE VALUES ARE IN
3. REFERENCE DESIGNATIONS ARE ABBRE
   PREEIX THE DESIGNATION WITH THE
   A3A1, A3A1A1 & A3A1A2 AS APPLICABL

TM5820-690-15-18

...er and 3d mixer A3A1, schematic diagram.

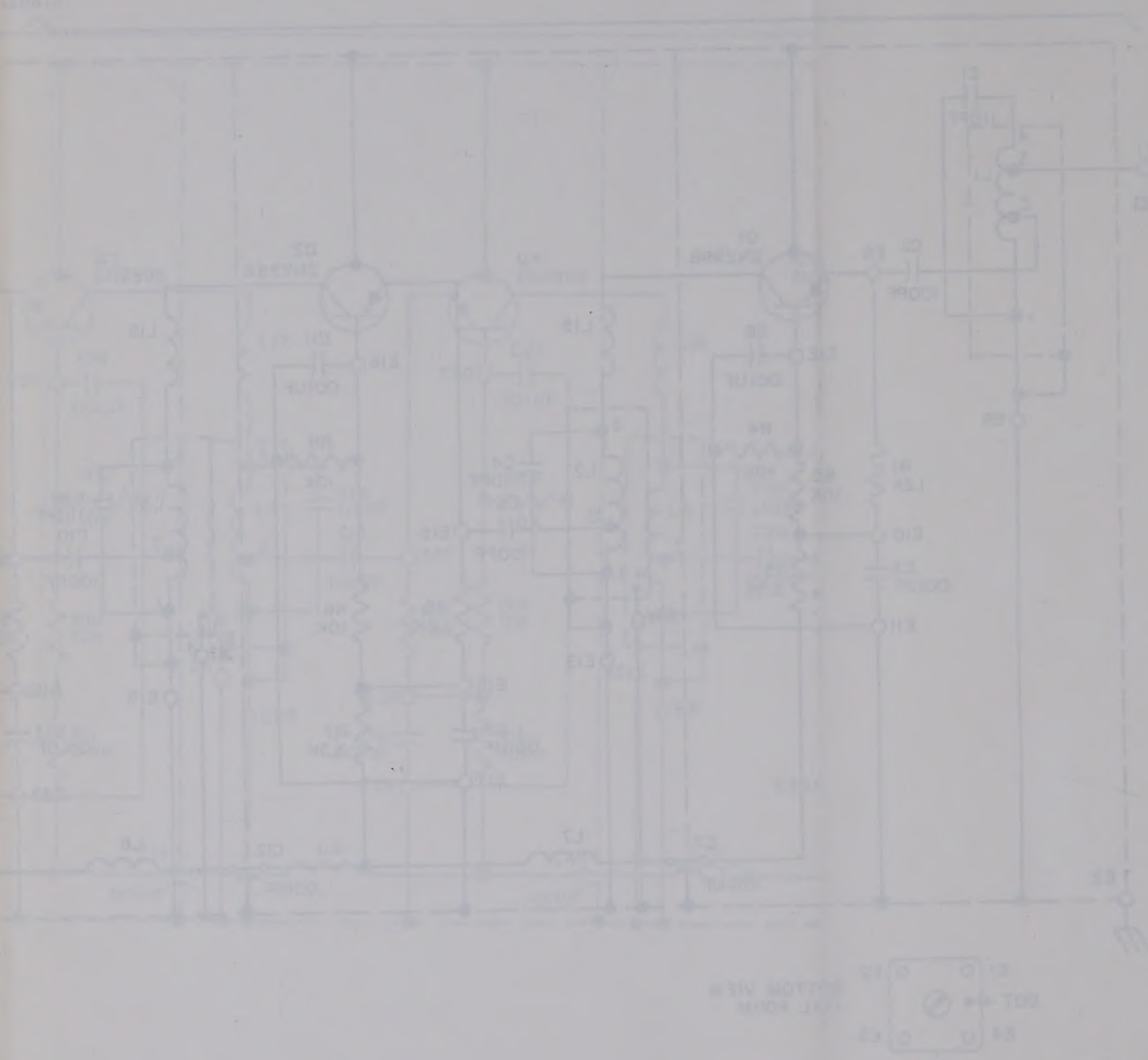

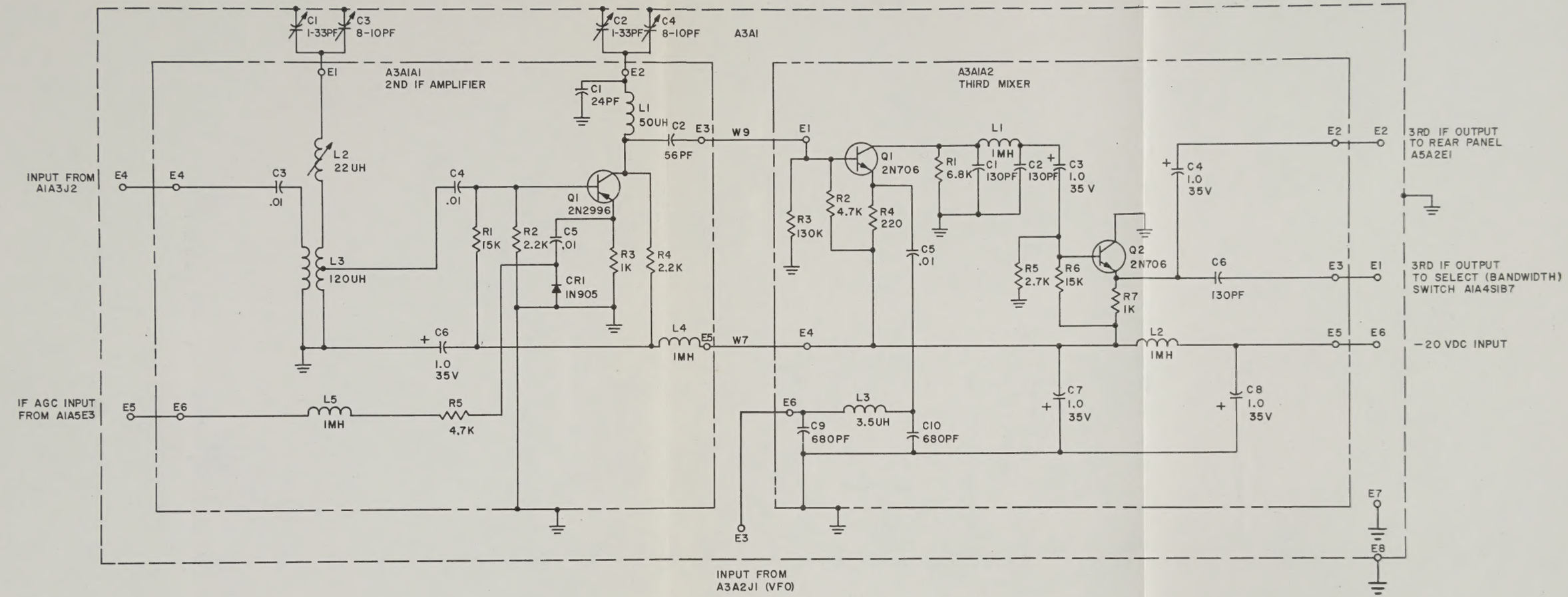

NOTES:
1. K=1,000 MEGO=1,000,000 F=FARAD H=HENRY
   M=MILLI U=MICRO W=WATT P=PICO
2. UNLESS OTHERWISE SPECIFIED:
   ALL RESISTANCE VALUES ARE IN OHMS.
   ALL RESISTORS ARE 1/4 W, ± 5 %.
   ALL CAPACITANCE VALUES ARE IN UF.
   ALL INDUCTANCE VALUES ARE IN
3. REFERENCE DESIGNATIONS ARE ABBREVIATED.
   PREEIX THE DESIGNATION WITH THE UNIT NUMBER
   A3A1, A3A1A1 & A3A1A2 AS APPLICABLE.

TM5820-690-15-18

Figure 6-27. 2d IF amplifier and 3d mixer A3A1, schematic diagram.

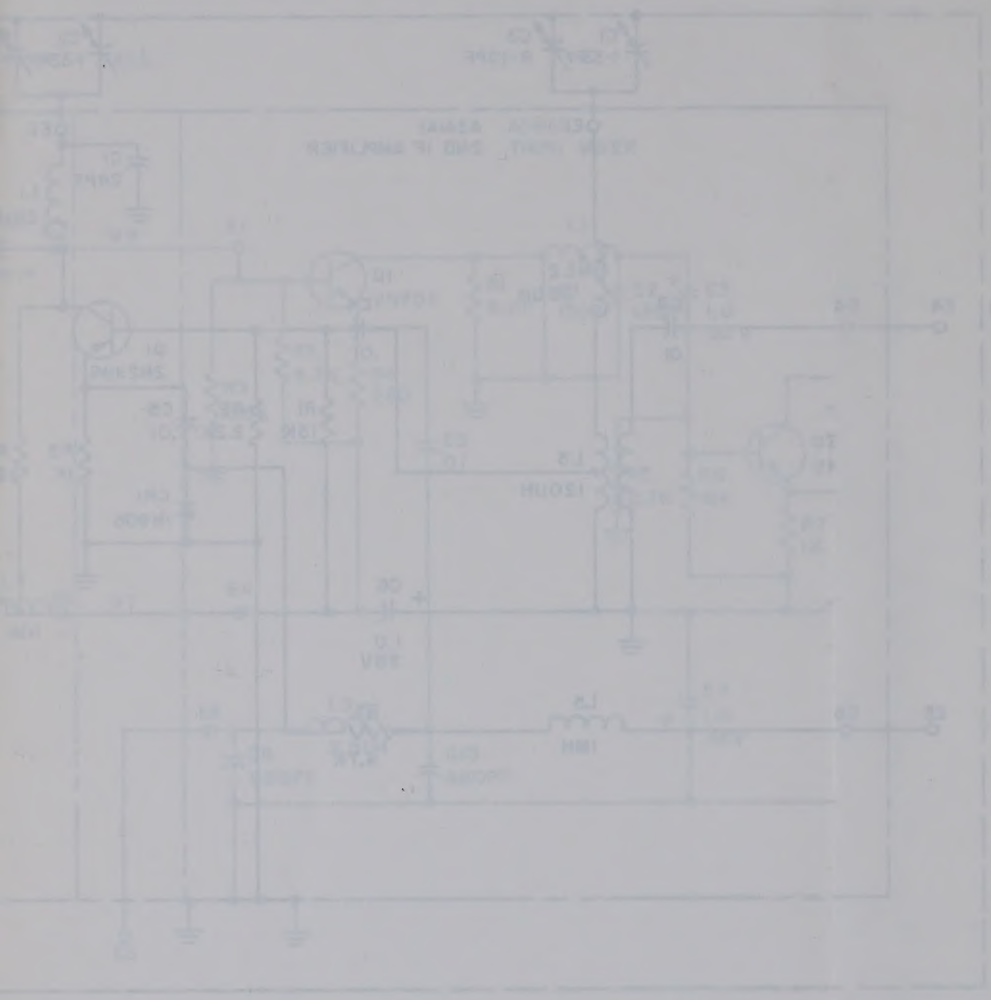

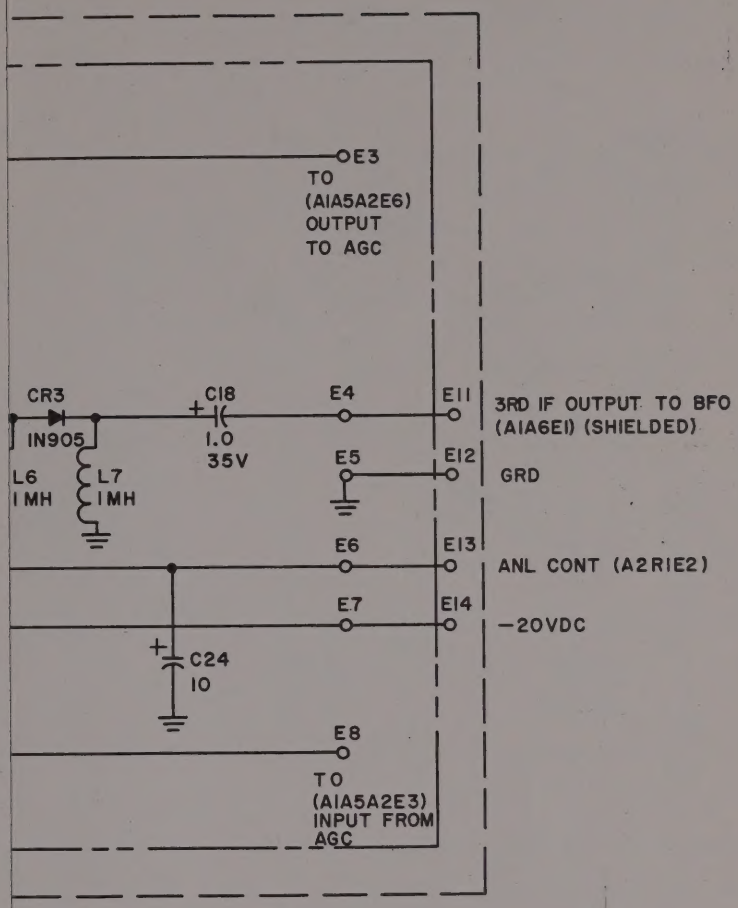

TM5820-690-15-22

nd age A1A5, schematic diagram.

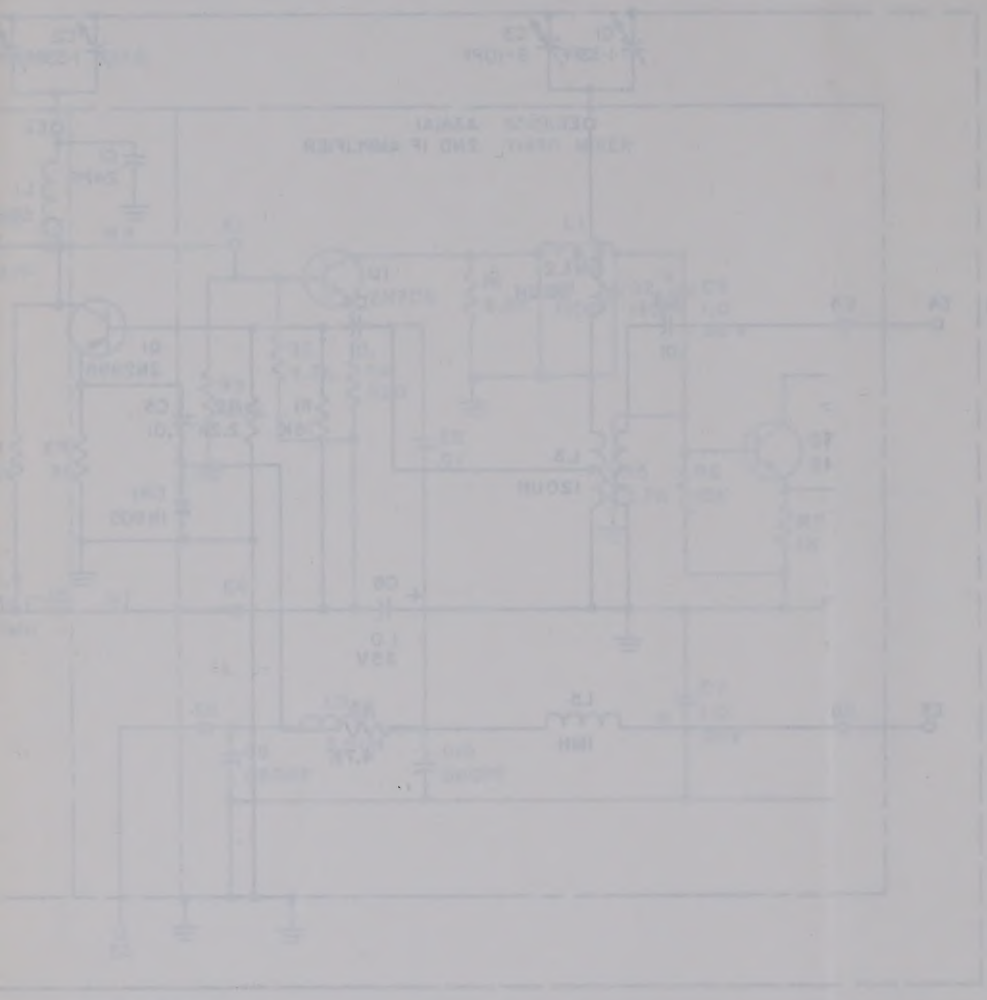

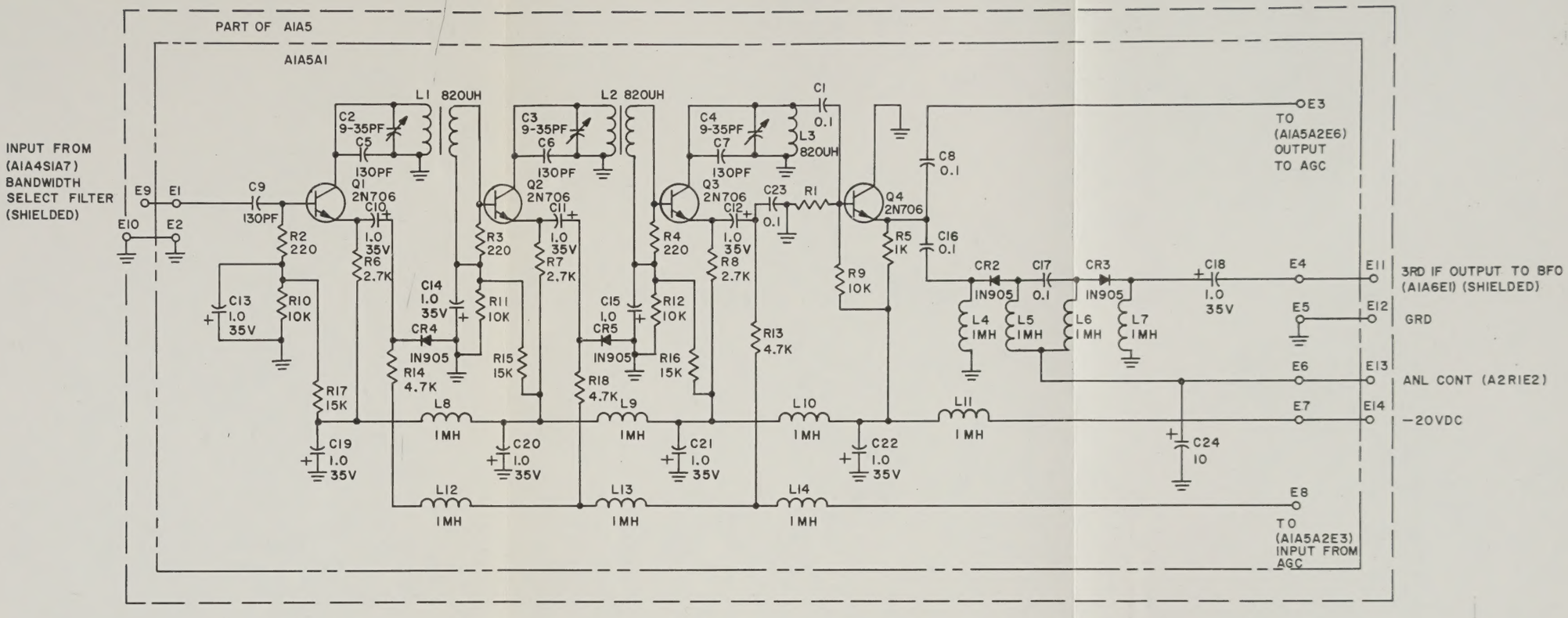

NOTES:
1. K=1,000 MEGO=1,000,000 F=FARAD H=HENRY
   M=MILLI U=MICRO W=WATT P=PICO
2. UNLESS OTHERWISE SPECIFIED:
   ALL RESISTANCE VALUES ARE IN OHMS.
   ALL RESISTORS ARE 1/4W, 5%.
   ALL CAPACITANCE VALUES ARE IN UH.
3. REFERENCE DESIGNATIONS ARE ABBREVIATED, PREFIX THE DESIGNATIONS WITH THE UNIT NUMBER A1A5 OR 1A1A5A1 AS APPLICABLE.

TM5820-690-15-22

Figure 6-28. 3d IF and age A1A5, schematic diagram.

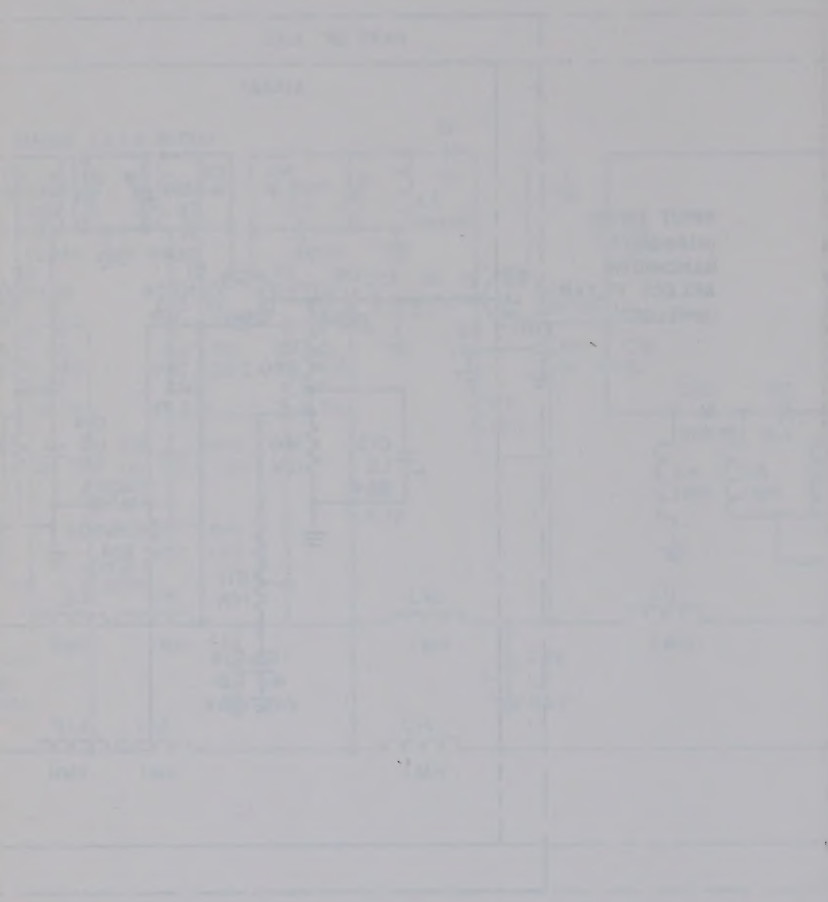

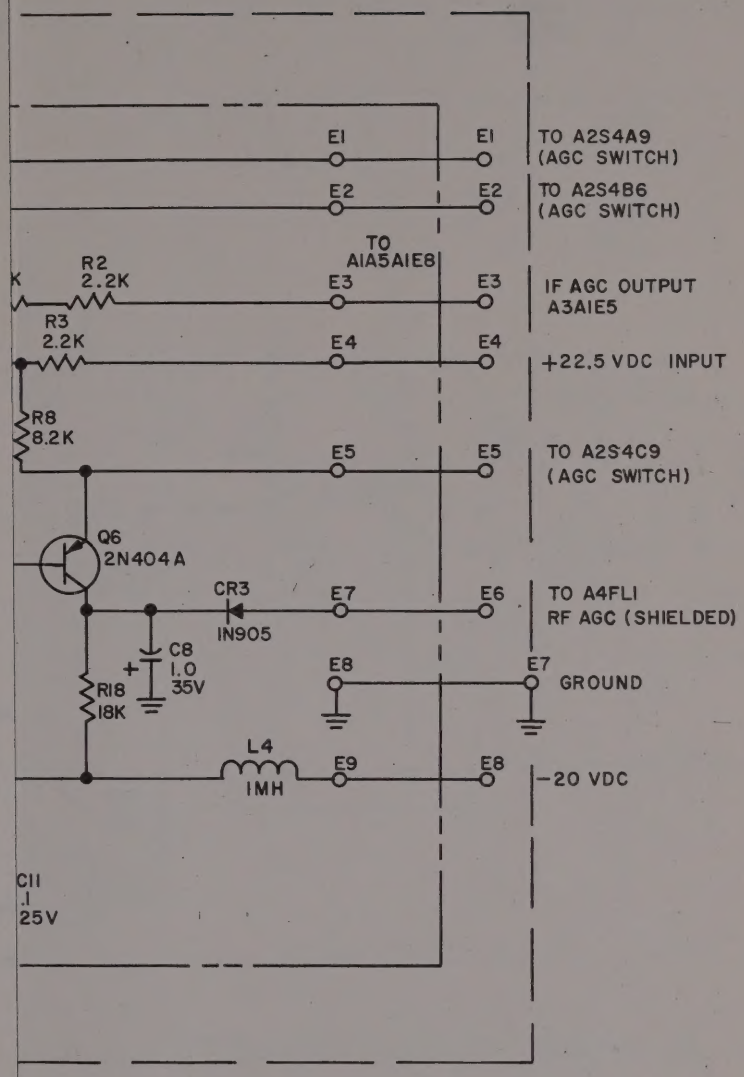

nd amplifier A1A5A2, schematic diagram.

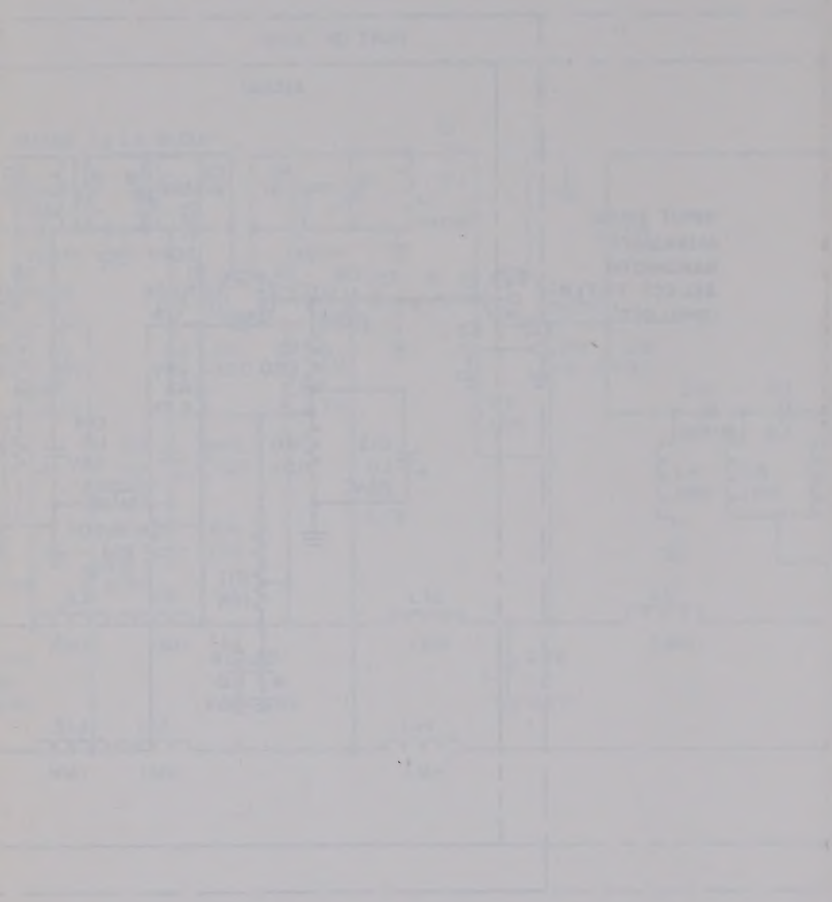

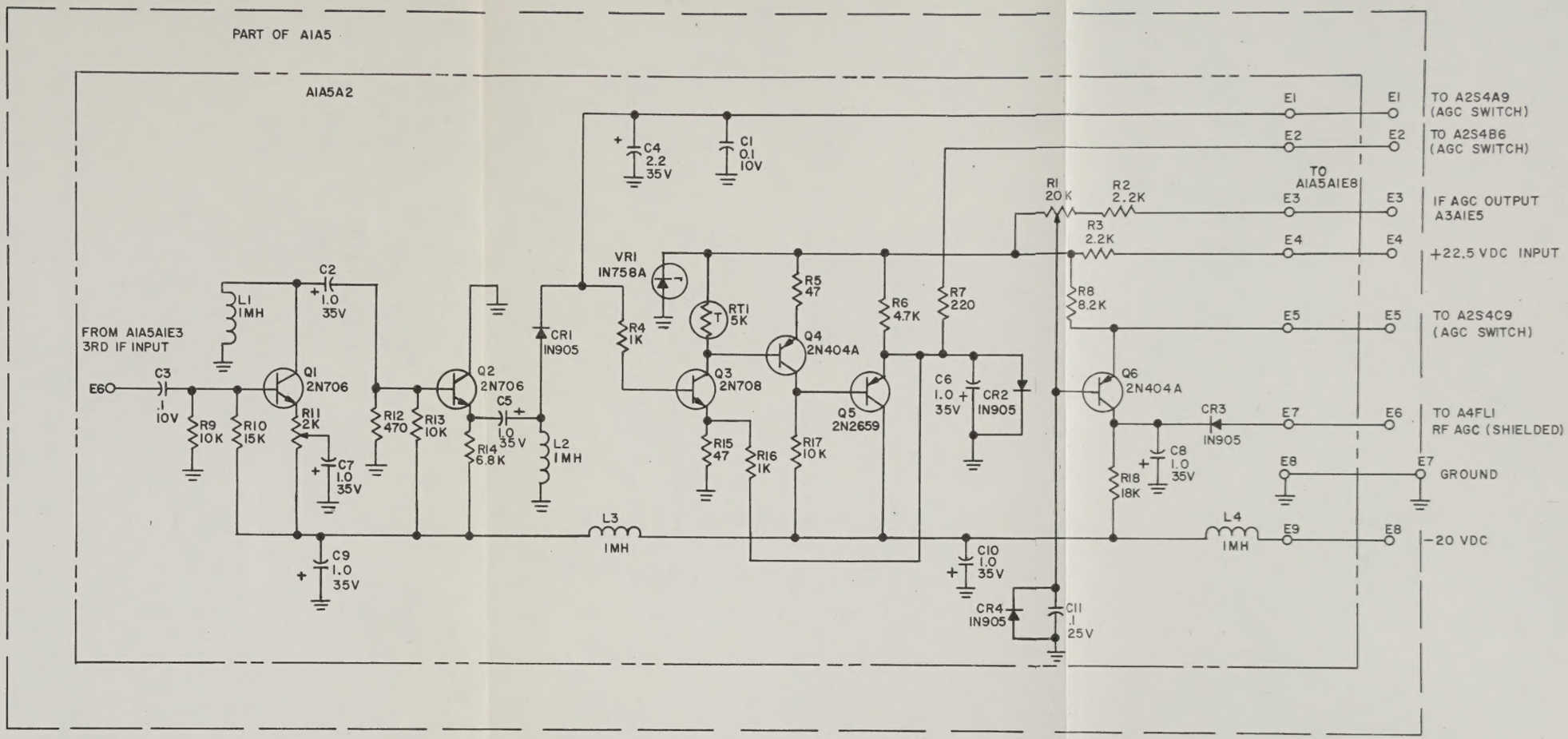

NOTES:
1. K=1,000 MEGO=1,000,000 F=FARAD H=HENRY M=MILLI U=MICRO W=WATT P=PICO
2. UNLESS OTHERWISE SPECIFIED:
   ALL RESISTANCE VALUES ARE IN OHMS.
   ALL RESISTORS ARE 1/4W, ±5%
   ALL CAPACITANCE VALUES ARE IN UF.
3. REFERENCE DESIGNATIONS ARE ABBREVIATED. PREFIX THE DESIGNATION WITH THE UNIT NUMBER A1A5 OR A1A5A2 AS APPLICABLE.

TM5820-690-15-23

Figure 6-29. Age detector and amplifier A1A5A2, schematic diagram.

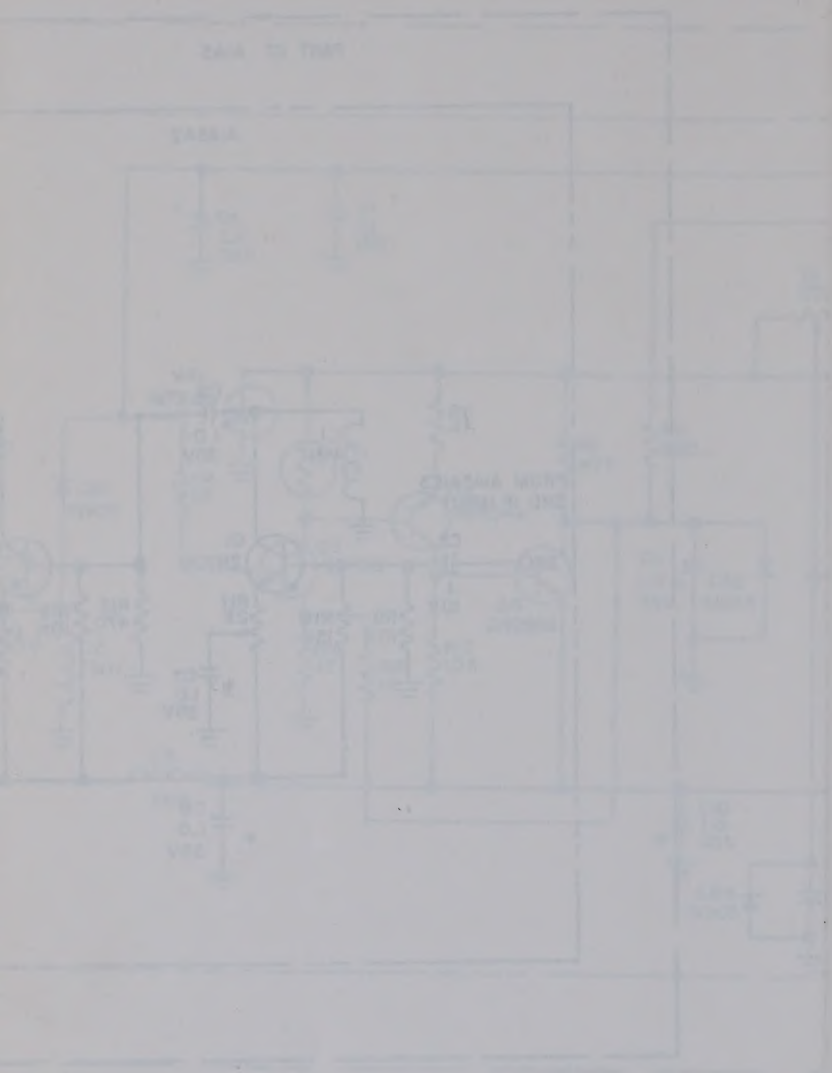

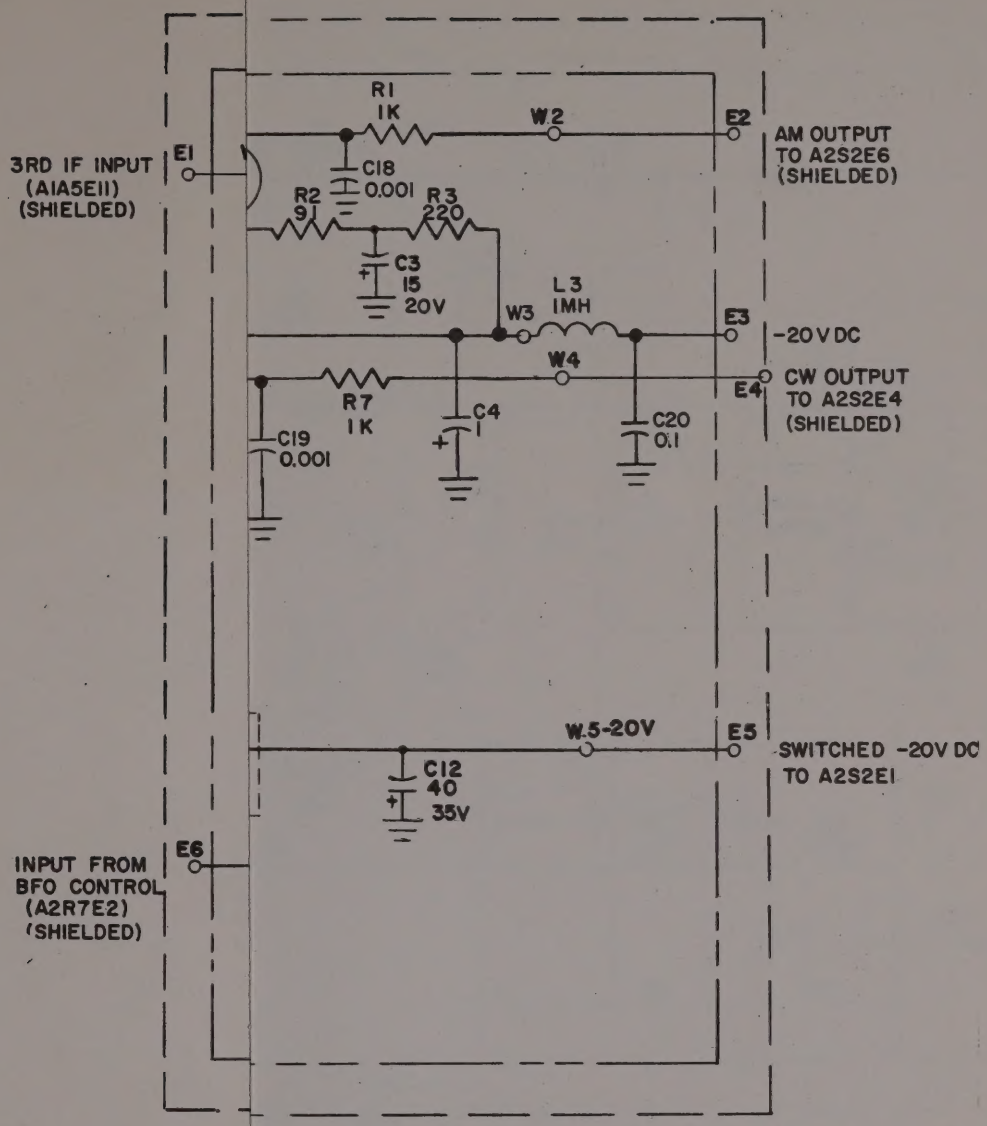

NOTES

1. K=1000 PF=PICO FARAD UF=MICF
2. UNLESS OTHERWISE INDICATED:
   ALL RESISTANCE VALUES AR
   ALL CAPACITANCE VALUES A
3. REFERENCE DESIGNATIONS ARE
   PREFIX THE DESIGNATION WITH
   A1A6 OR A1A6A1 AS APPL

TM5820-690-15-24

detector A1A6, schematic diagram.

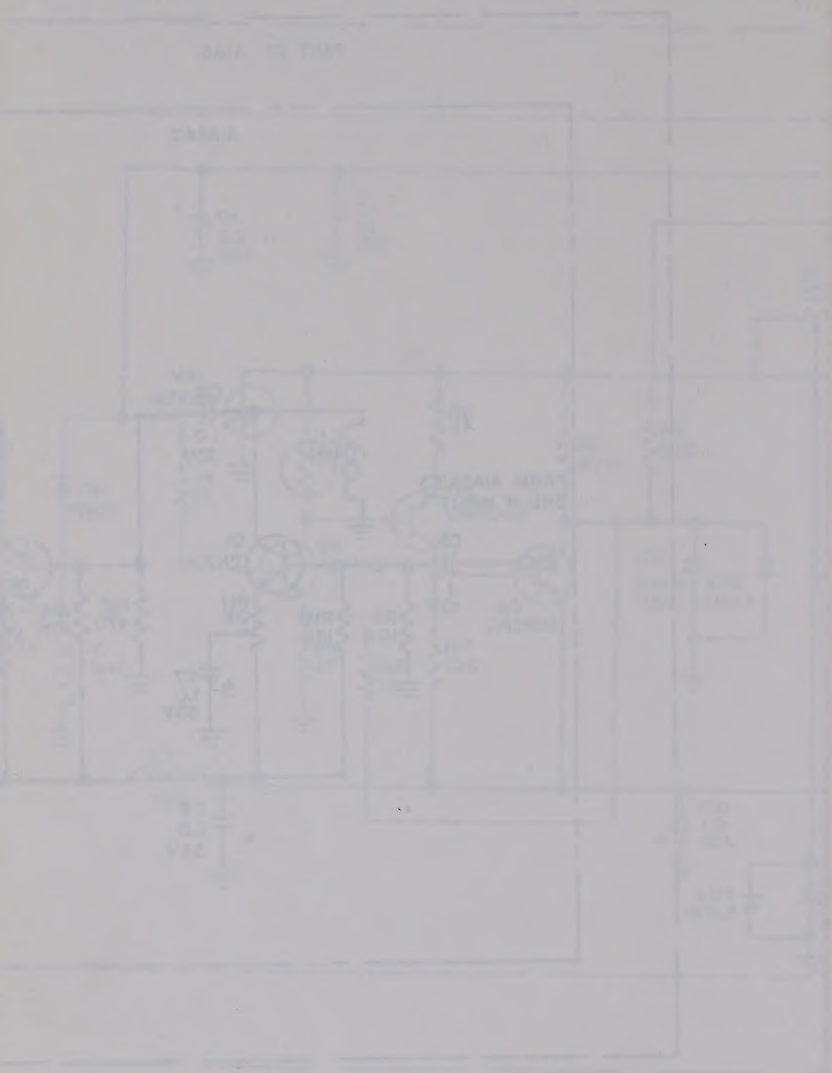

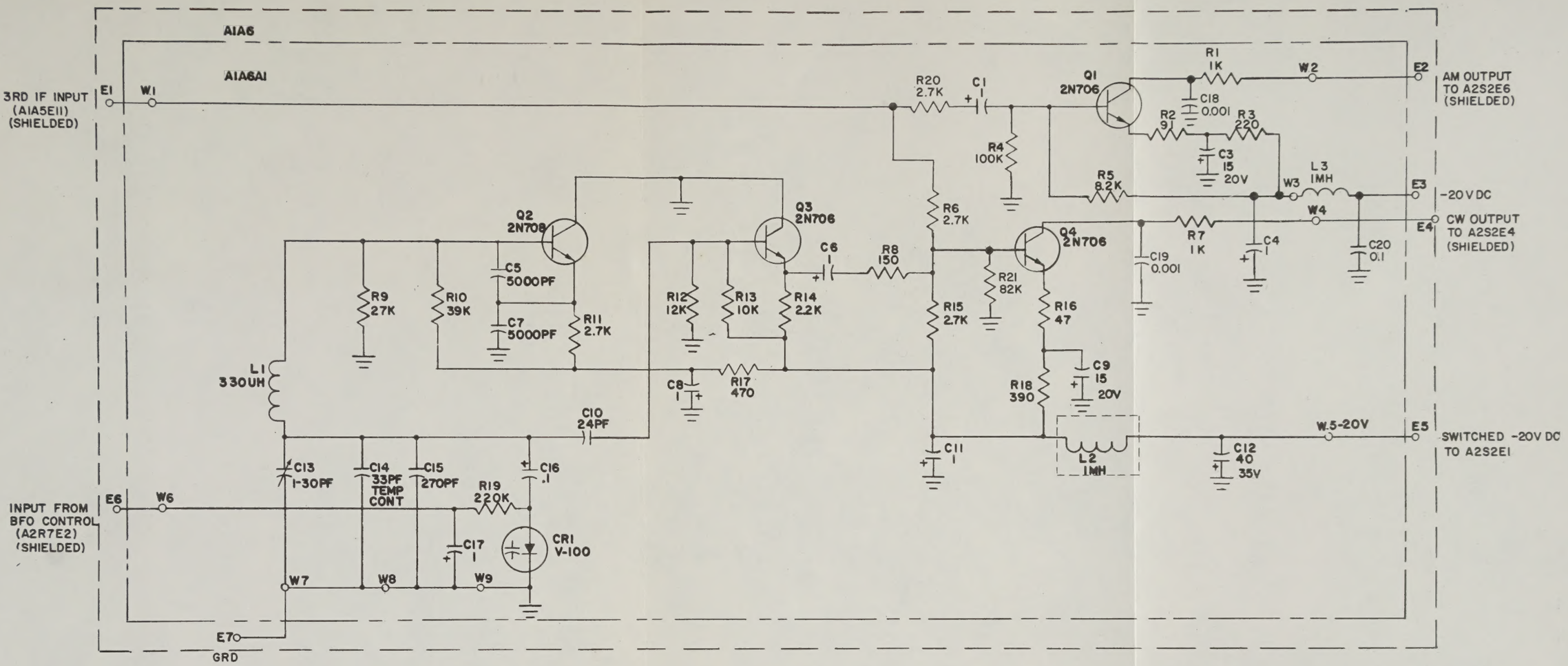

NOTES
1. K=1000 PF=PICO FARAD UF=MICROFARAD MH=MILLIHENRY W=WATT
2. UNLESS OTHERWISE INDICATED:
   ALL RESISTANCE VALUES ARE IN OHMS 1/4W ±5%
   ALL CAPACITANCE VALUES ARE IN UF
3. REFERENCE DESIGNATIONS ARE ABBREVIATED
   PREFIX THE DESIGNATION WITH UNIT NUMBER
   A1A6 OR A1A6A1 AS APPLICABLE

TM5820-690-15-24
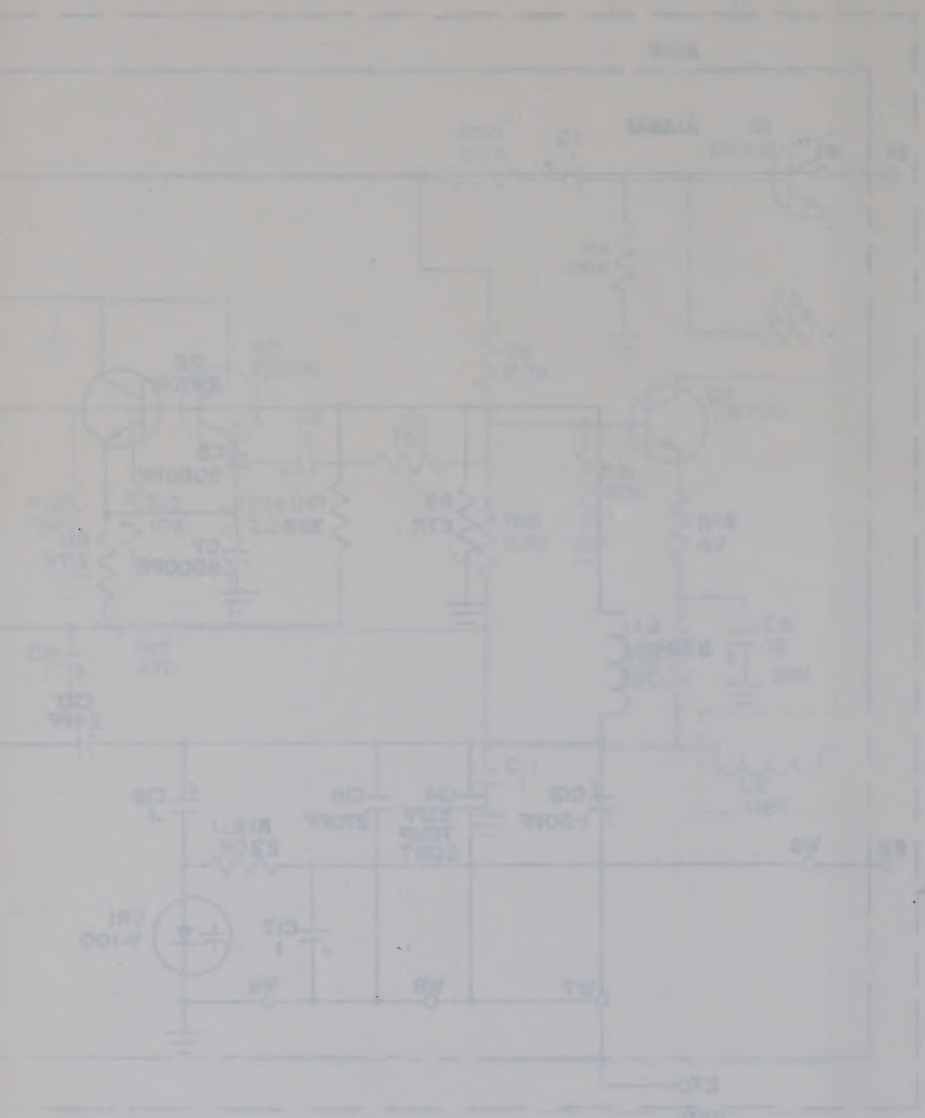
Figure 6-30. Bfo and detector A1A6, schematic diagram.